Prof. Dr. N. RACOVEANU
M. ALTĂR

Analog Simulation of the Interbranch Balance Based on the Properties of the Coefficient Matrix

The possible formulation of the problem of national economy structure optimization is suggested in this paper, as well as the simulation of the model of inter-branch balance on an analog computer.

It is a well-known fact that the interbranch balance is essentially a model reflecting, in value expression or in natural units, the output of each economic branch, the consumption, as distributed, among the various branches, out of the product available from each of the other branches, as well as out of the self-produced output, the final product of each separate branch and of economy as a whole, the final product distribution, a.s.f.

The interbranch balance is a valuable tool for national economy management, for assessing the basic quotas in economy and for decision making in most important economic issues. The interbranch balance together with its mathematical apparatus are useful in ascertaining all possible effects on economy produced by any change in the amount of an economic branch output or consumption, in estimating production quotas in accordance with a certain amount of the final product, in securing an adequate price level, etc.

It is obvious that based on interbranch connections, the statement of an optimization problem is theoretically feasible. However, this development is not possible at present, since a final conclusion has not yet been reached concerning the criterion chosen for the macroeconomic optimum.

In order to cope with the needs of national economy planning, several variants are developed, generally as many as possible, and on the basis of economic policy reasons, that one is selected which is most suitable in a particular stage.

Under such circumstances, simulation on an analog computer could be highly useful, as it allows, during a relatively short interval, a great number of variables to be obtained, together with their variation according to the change of initial data.

1. THE MATHEMATICAL MODEL

Let the system of balance equations, in value units, be:

$$x_i = \sum_{j=1}^{n} x_{ij} + y_i \quad (i = 1, 2, ..., n) \tag{1}$$

where the following notations have been used:

x_i = gross output of branch i $(i = 1, 2,...,n)$;

x_{ij} = the amount of products manufactured in branch i and transferred for productive consumption to branch j $(i, j = 1, 2, ..., n)$; and

y_i = final products of branch i $(i = 1, 2, ..., n)$.

By introducing the coefficients of direct expenses, we obtain:

$$\alpha_{ij} = \frac{x_{ij}}{x_j} \tag{2}$$

and

$$x_i = \sum_{j=1}^{n} \alpha_{ij} x_j + y_i \quad (i = 1, 2, ..., n) \tag{3}$$

or in matrix form:

$$(E - A)X = Y. \tag{4}$$

2. PROPERTIES OF THE MATRIX OF COEFFICIENTS

Matrix $(E - A)$ has a set of properties, exhibiting a particularly interesting economic significance, on the one hand, and useful for simulation, on the other.

Theorem 1

Matrix $(E - A)$ is non-singular.

Proof

It is well-known that a matrix $B = \| b_{ij} \|_{nxn}$ with the following property

$$b_{ii} > 0 \quad \text{and} \quad b_{ii} > \sum_{\substack{j=1 \\ j \neq 1}}^{n} |b_{ij}|$$

is non-singular. As matrix $(E - A)$ with $\sum_{j=1}^{n} a_{ji} \leqslant 1$ has the above-mentioned properties, it is non-singular.

Theorem 2

Matrix $(E - A)$ is positively defined.

Proof

It is well-known that a matrix $B = \| b_{ij} \|_{n \times n}$ with the following property

$$Reb_{ii} > 0 \quad Reb_{ii} > \sum_{\substack{j=1 \\ j \neq 1}}^{n} | b_{ji} |$$

a condition satisfied by the technological matrix, is positively defined.

In the following we shall use some highly significant properties of non-negative matrices (quadratic matrices having only non-negative elements).

To begin with, we shall recall the following theorem developed by Perron.

Theorem 3

A non-negative matrix $A = | c_{ij} |_{n \times n}$ *always has a real and non-negative proper value* x, *which is the simple root of the characteristic polynomial and is greater than the modulus of the other proper values. A non-negative proper vector corresponds to this proper value.*

A particularly interesting result has been independently obtained by several mathematicians, but was for the first time published by Collatz in 1946 and definitely stated by Wielandt in 1950.

This result can be formulated in the following theorem.

Theorem 4

Let A *be a non-negative matrix and* λ_1 *the highest proper value in the modulus.*

We shall define the following two values:

$$S(A) = \{ \lambda \mid (\exists)\ X \geqslant 0, \qquad Ax \geqslant \lambda x \}$$

$$T(A) = \{ \lambda \mid (\exists)\ X \geqslant 0, \qquad Ax < \lambda x \}$$

We have:

$$\lambda_1 = \max_{\lambda \in S(A)} \lambda = \min_{\lambda \in T(A)} \lambda \tag{5}$$

and moreover,

$$\lambda_i = \max_{X \geqslant 0} \min_{i} \frac{\sum_{j=1}^{n} a_{ij} x_j}{x_i} = \min_{X \geqslant 0} \max_{i} \frac{\sum_{j=1}^{n} a_{ij} x_j}{x_i} \tag{6}$$

The above results are applicable for the matrices of technical coefficients whose elements, as already known, are non-negative.

3. OPTIMIZATION OF NATIONAL ECONOMY STRUCTURE

It is a widely known fact that the extent of the weight of national income in the gross social product is particularly interesting theoretically, as well as from the practical viewpoint.

Socialist economy is highly concerned in the kind of correlation established between national income dynamics and its evolution within the gross social product. Socialist economy is, moreover, interested in that development which allows the continuous expansion of the output, simultaneously with the systematic growth of the living standard.

This fact assumes that within this correlation national income increase should, as a trend, go ahead, of the gross social product development in such a manner that, as time goes on, one unit of gross social product contains an increased share of national income. This is a synthetic expression for the efficiency of the whole economic activity.

Among the factors affecting the correlation between the gross social product and the national income, a prominent place is held by the value structure of the gross social product and of the national income, as shown by each branch of national economy.

In the following, our purpose is to find the optimal structure of national economy within specific known circumstances, in other words, the particular structure associated to a maximal weight of national income in the gross social product.

It goes without saying that the maximization of the national income weight within the gross social product cannot be an end per se.

Nevertheless, information on the optimal structure in each national economy branch, as well as on the highest possible weight of the national income in the gross social product, could be of paramount importance in the planning activity.

Keeping in mind the above considerations, it is possible, for instance, to appraise the deviation of this weight, which corresponds to a specific plan approved on the basis of economic policy reasons, from the optimal weight.

Generally, our purpose is to know the highest value of the ratio

$$Z = \frac{\sum_{i=1}^{n} y_i}{\sum_{i=1}^{n} x_i} \tag{7}$$

where:

$$y_i = x_i - \sum_{j=1}^{n} a_{ij} x_j \; (i = 1, 2, \ldots, n) \tag{8}$$

In other words, the highest value of the ratio

$$Z = \frac{\sum_{i=1}^{n} x_i - \sum_{j=1}^{n} a_{ij}x_j}{\sum_{i=1}^{n} x_i} = 1 - \frac{\sum_{j=1}^{n} a_{ij}x_j}{\sum_{i=1}^{n} x_i}. \qquad (7')$$

If V_i stands for the newly created value per product unit in branch i, then

$$V_i = 1 - \sum_{k=1}^{n} a_{ki} \qquad (9)$$

and the above relation (7') can also be written

$$Z = \frac{\sum_{i=1}^{n} V_i x_i}{\sum_{i=1}^{n} x_i}. \qquad (10)$$

In the specific case when on all branches the same new value is created per product unit, that is:

$$V_i = V_2 = \ldots V_n = V \qquad (11)$$

we obtain:

$$Z = V \qquad (12$$

whatever plan X would be.

In the general case, expression (10) has not a maximum, as the sole critical point of the function is its origin, where the function is not, however, defined.

Since we have relation

$$Z = \frac{\sum_{i=1}^{n} y_i}{\sum_{i=1}^{n} x_i} \geqslant \rho_x \qquad (13)$$

where

$$\rho_x = \min_i \frac{y_i}{x_i}. \qquad (14)$$

we shall raise the problem of maximizing the lower limit of index Z, that is of ρ_x.

Consequently, we shall characterize each plan X through the index ρ_x, expressing the lowest ratio of the final product to the gross product of the branches.

Theorem 5

The necessary and sufficient condition for the plan X to maximize the value of index

$$\rho_z = \min \frac{y_i}{x_i}$$

is that it be a proper vector, corresponding to the highest proper value of matrix A. We have

$$\max_{x \geqslant 0} \rho_x = 1 - \lambda_1 \tag{15}$$

where λ_1 is the highest proper value of matrix A.

Proof.

We have:

$$\max_{x \geqslant 0} \rho_x = \max_{x \geqslant 0} \min_i \frac{y_i}{x_i} = \max_{x \geqslant 0} \min_i \frac{x_i - \sum_{j=1}^{n} a_{ij} x_i}{x_i} = 1 - \min_{x \geqslant 0} \max_i \frac{\sum_{j=1}^{n} a_{ij} x_i}{x_i}$$

and according to theorem 4, we obtain:

$$\max_{x \geqslant 0} \rho_x = 1 - \lambda_1$$

and the theorem is proved.

As for the localization of the proper values of matrix A, it is, for instance, known that by denoting:

$$P = \max \left(\sum_{j=1}^{n} a_{ij} \right) \tag{16}$$

$$Q = \max \left(\sum_{j=1}^{n} a_{ij} \right) \tag{17}$$

we obtain relation:

$$|\lambda_k| \leqslant \min (P, Q) \quad (R = 1, 2, ..., n) \tag{18}$$

where λ_k are the proper values of matrix A.

Since $Q \leqslant 1$, it results that $\lambda_1 \leqslant 1$.

On the other hand, it is widely known that the computation of the proper values of a matrix is an elaborate operation. As we are interested only in the highest proper value, several algorithms suggested in the specialty literature can be applied. For instance, if Y is a vector whatever, such as $Y = (1, 0, ..., 0)$ and the following products are calculated:

$$AY_0;\ A^2Y_0;\ ...,\ A^kY_0,$$

it is known that

$$\lambda_1 = \frac{y_{ik+1}}{y_{ik}} \tag{19}$$

where y_{ik} and y_{ik+1} are the constituents i of the vectors A^kY_0, $A^{k+1}Y_0$, respectively.

Hence, this method allows the estimation of λ_1, through raising matrix A to various powers.

An interesting problem which will be examined is related to the sensitivity of λ_1 with respect to the change of matrix A elements.

Example No. 1

We shall assume national economy to be divided into two branches only and let the coefficient matrix be

$$A = \begin{Vmatrix} 0.1 & 0.3 \\ 0.5 & 0.2 \end{Vmatrix}$$

The characteristic polynomial is:

$$\lambda^2 - 0.3\,\lambda - 0.13 = 0.$$

The proper values of this matrix are:

$$\lambda_1 = 0.54 \text{ and } \lambda_2 = -0.24.$$

Hence, the optimal value between the national income and the gross social product (in the sense agreed upon) is

$$\rho_x = 1 - \min_{x \geqslant 0} \max_{i} \frac{\sum_{i=1}^{n} a_{ij}x_i}{x_i} = 1 - 0.54$$

hence

$$\rho_x = 0.46.$$

The corresponding proper vector is:

$$x_1 = z,$$

$$x_2 = 1.47\ z.$$

In other words, an optimal ratio is obtained of the national income to the gross social product, if the ratio of sector 2 output to sector 1 output in the above model is 1.47. In this case, the ratio is equal to 0.46.

Example No. 2

We shall now assume national economy to be divided into three branches and let the coefficient matrix be:

$$A = \begin{Vmatrix} 0.2 & 0.2 & 0.1 \\ 0.1 & 0.3 & 0.5 \\ 0.3 & 0.4 & 0.1 \end{Vmatrix}$$

with the following characteristic polynomial:

$$\lambda^3 - 2.4\lambda^2 - 4.66\,\lambda - 0.271 = 0.$$

The proper values of the matrix are

$$\lambda_1 = 0.764;\ \lambda_2 = 0.065;\ \text{and}\ \ \lambda_3 = -0.229.$$

The optimal value between the national income and the gross social product is:

$$\rho_x = 1 - 0.764 = 0.236\ \ \rho_x = 0.236.$$

The corresponding proper vector is:

$$x_1 = 0.61\ z$$

$$x_2 = 1.21\ z$$

$$x_3 = z.$$

Consequently, we obtain an optimal ratio of the national income to the gross social product equal to 0.236 only if among the outputs of the three branches the following ratios prevail:

$$0.61 : 1.21 : 1.$$

If, in example No.1, we assume a_{11} to be diminished by a unit, the matrix becomes:

$$A = \begin{Vmatrix} 0 & 0.3 \\ 0.5 & 0.2 \end{Vmatrix}$$

and λ_1 becomes 0.50, hence $\rho_x = 0.50$. If a_{22} is diminished by a unit, we get $\rho_x = 0.52$. Finally, if a_{12} or a_{21} are diminished by a unit, we obtain $\rho_x = 0.53$ and $\rho_x = 0.50$, respectively.

It can be seen that if we are able to decrease one of the specific expenditure coefficients, it is most efficient to diminish a_{12}. In this case index ρ_x increases from 0.46 to 0.53.

4. BALANCE SIMULATION ON THE ANALOG COMPUTER

The simulation of the balance on the universal analog computer assumes the solving of system

$$(E - A)\,X = Y \qquad \det(E - A) \neq 0 \tag{20}$$

where $E - A$ stands for a positively defined matrix, X is the unknown vector, and Y is a given constant vector.

It is well-known that the direct accoplishment with summation instruments and potentiometers is practically impossible, owing to the lack of stability of the scheme achieved on the computer. The reason is that operational amplifiers are practically not embodying the necessary ideal conditions to play the part of a summation instrument.

The solving of linear algebraic system si stherefore effected by associating a system of differential equations equivalent to the given algebraic system, in such a manner that the limit towards which the solution of the system of differential equations tends, when $t \to \infty$, is at the same time the solution to the algebraic system. In the general case, in order to accomplish the stability conditions, the left part of equation (20) is first multiplied by the transposed matrix $(E - A)$ and the following system is programmed on the computer:

$$\frac{dX}{dt} = -(E - A)^T \times (E - A)\;X + (E - A)^T \times Y. \tag{21}$$

Since matrix $(E - A)^T \cdot (E - A)$ is positively defined, the system is stable and the solution at the limit is the solution to the algebraic system.

In the case of the interbranch balance, matrix $E - A$ is always positively defined.

It results that it is possible to proceed directly to the differential system

$$\frac{dX}{dt} = -(E - A)X + Y. \tag{22}$$

We shall now show that the solution at the limit to the diferential system (22) is the solution to the algebraic system (21).

We apply the Laplace transform:

$$s\mathcal{L}X = -(E - A)\,\mathcal{L}X + \frac{Y}{s}$$

and consequently,

$$[(s + 1)\,E - A]\,\mathcal{L}X = \frac{Y}{s}. \tag{23}$$

We considered the initial conditions as being zero:

$$X(O) = 0$$

but the same result is also attained for $X(O) \neq 0$.

Equation (23) leads to:

$$\mathcal{L}X = [(s + 1)\,E - A]^{-1}\,\frac{Y}{S}.$$

According to the theorem of the final value, we further have

$$\lim_{t\to\infty} X(t) = \lim_{s\to 0} (s + 1)\,E - A^{-1} \times Y = (E - A)^{-1} \times Y$$

that is the solution at the limit to the differential system, (3) is the solution to the algebraic system (20).

The dynamic model

$$\frac{dX}{dE} = -(E - A)\,X + Y$$

is an analog of the dynamic model analyzed by Goodwin, Chipman, Solow, et al., for the discrete case, namely

$$x(t + 1) = Ax(t) + Y \tag{24}$$

or

$$x(t + 1) - x(t) = -(E - A)x(t) + Y. \tag{25}$$

The general solution to the difference equation (24) or (25) is

$$x(t) = A^t x(O)\,(J + A + A^2 + \ldots + A^{t-1})\,Y. \tag{26}$$

Since for our matrix we have

$$\lim_{t\to\infty} A^t = 0$$

and the identity

$$I(-A)(E + A + A^2 + ... + A^{t-1}) = I - A$$

or

$$E + A + A^2 + ... + A^{t-1} = (E - A)^{-1}(I - A),$$

it results

$$\lim_{t\to\infty} (E + A + A^2 + ... + A^t) = (E - A)^{-1}$$

Consequently, for solution (26) we have

$$\lim_{t\to\infty} x(t) = (E - A)^{-1}$$

that is precisely the solution to equation (20).

Two systems of equations have been solved on the analog computer of the Computation Centre of the Bucharest University, on the basis of the above reasoning. In figure 1 the schematic circuits are shown and in figure 2 the solutions thus obtained are illustrated.

SIMULATION ANALOGIQUE DU MODELE ENTREE-SORTIE UTILISANT LES PROPRIETES DE LA MATRICE DES COEFFICIENTS

Le modèle entrée — sortie constitue l'un des instruments les plus nécessaires à la direction de l'économie nationale, pour établir les proportions fondamentales de l'économie et pour adopter certaines décisions optimes dans les problèmes économiques de haute importance.

On peut, de manière théorique, formuler à l'aide du modèle entrée — sortie, un problème d'optimisation à l'échelle nationale. Dans notre pays cela n'est pas possible dans l'étape actuelle, car on n'est pas encore arrivé à une conclusion définitive en ce qui concerne le critérium optimum.

Dans ces conditions, la simulation sur un ordinateur analogique peut être d'une extrême utilité, nous permettant d'obtenir un grand nombre de variantes dans un laps de temps assez réduit, ainsi que la manière de variation de ces dernières selon les données initiales.

Toujours à l'aide d'un simulateur analogique on peut connaître, de façon rapide, l'influence complexe exercée par la réduction de chaque coefficient a_{ij}.

On présente dans l'étude toute une série de théorèmes sur plusieurs propriétés importantes de la matrice technologique.

On traite aussi du problème de la maximisation du poids spécifique du revenu national dans le produit social total.

Enfin, on fait l'analyse du problème de la localisation et de la sensitivisation rapportées à la modification des éléments de la matrice A de la valeur caractéristique la plus grande.

$$\frac{dX}{dt} = -(E - A)\,X + Y$$

On prénte le schéma de principe et les solutions obtenues pour un système d'équations du 6-e degré.

АНАЛОГИЧЕСКОЕ СИМУЛИРОВАНИЕ БАЛАНСА МЕЖОТРАСЛЕВЫХ СВЯЗЕЙ НА ОСНОВЕ СВОЙСТВ МАТРИЦЫ КОЭФФИЦИЕНТОВ

Как известно, баланс межотраслевых связей является особенно ценным орудием руководства народным хозяйством, установления основных пропорций в народном хозяйстве и принятия оптимальных решений по экономическим вопросом особой важности.

Теоретически на основе баланса межотраслевых связей можно приступить к формулированию какого-либо вопроса оптимизации. Однако, на нынешнем этапе это не представляется возможным, так как не существует окончательных заключений в отношении критерия макроэкономического оптимума.

В этих условиях симулирование при помощи аналогического калькулятора может быть особенно полезным, позволяя в сравнительно короткое время получить большое число вариантов, а также способ их вариации в зависимости от изменения первоначальных данных.

При помощи аналогического симулятора можно также оперативно определить комплексное влияние, оказываемое сокращением каждого коэффициента.

Затрагивается также вопрос максимизации удельного веса национального дохода в совокупном общественном продукте.

В статье рассматривается вопрос локализации и чувствительности наибольшей собственной величины по отношению к изменению элементов матрицы A.

Для симулирования баланса при помощи аналогического калькулятора переходят к следующей динамической системе:

$$\frac{dX}{dt} = -(E - A)X + Y$$

В статье приводятся принципиальная схема и полученные решения для системы уравнений порядка 6.

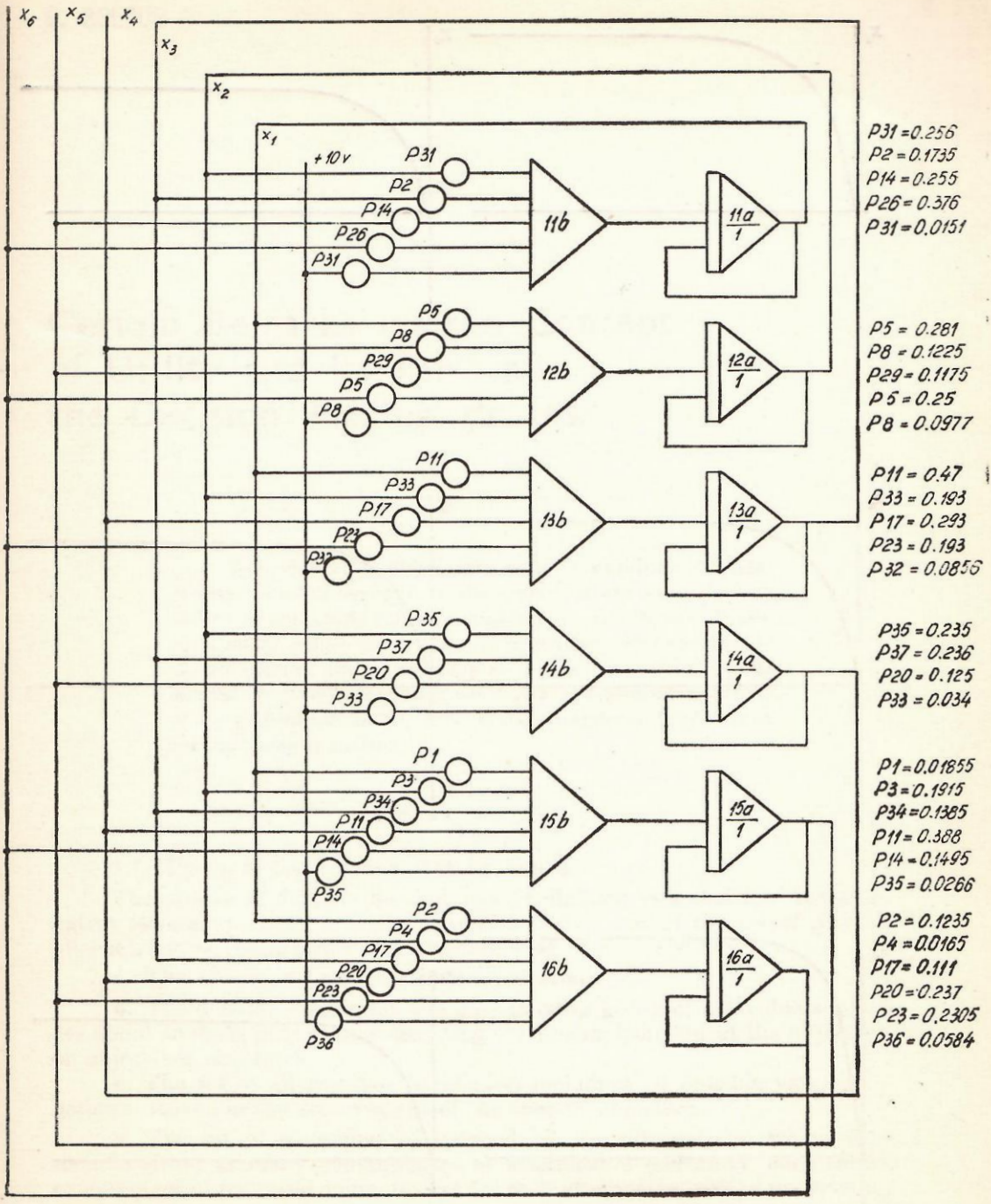

Fig. 1. Schematic circuit for the system of six equations with six unknowns.

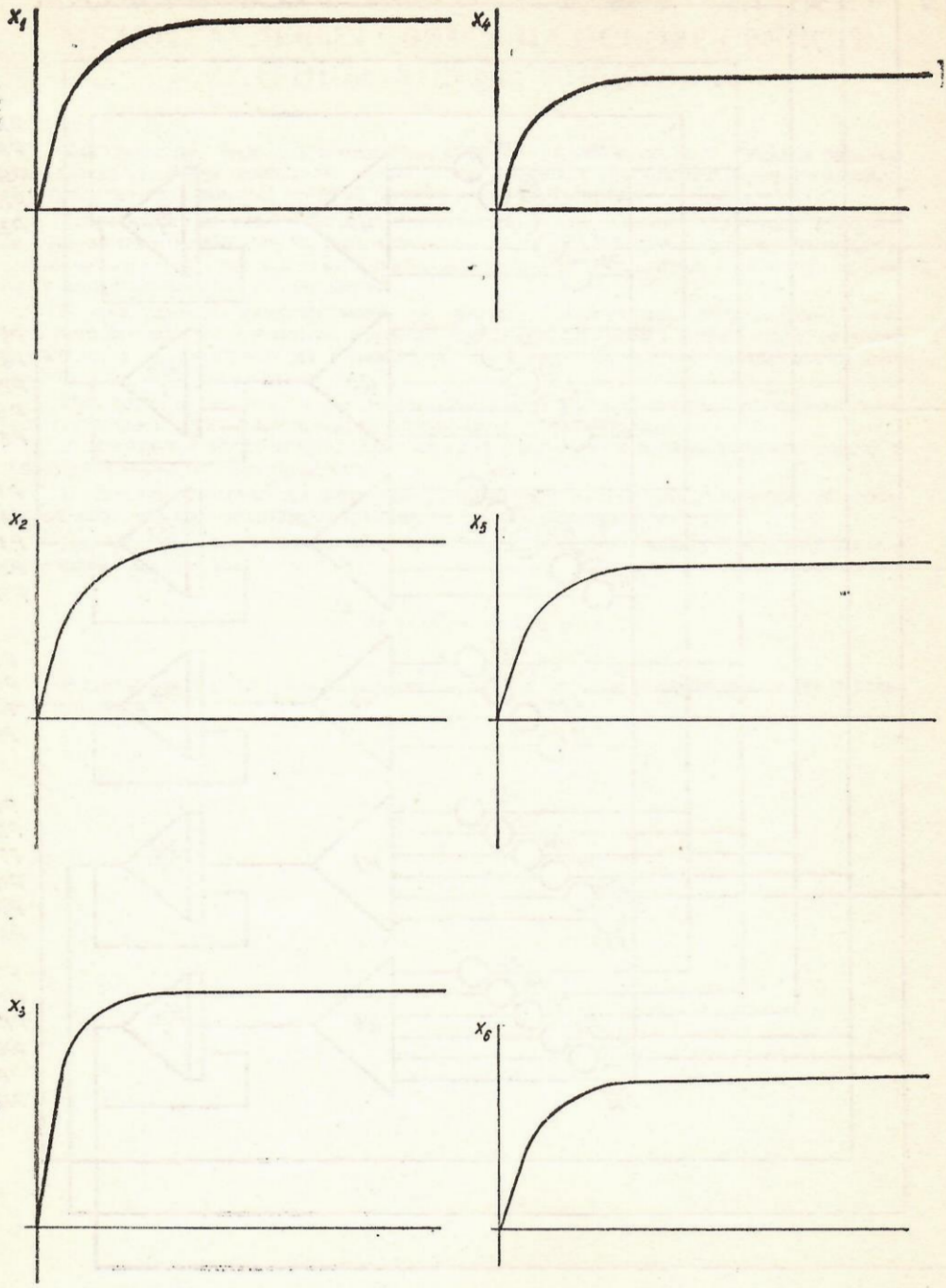

Fig. 2