ENG. O. MANGIUREA

Analysis of economic efficiency of statistical methods for size control of automatic machine tools

This study presents comparatively, from the standpoint of economic efficiency, the applying of the various types of control in a workshop of automatic lathes not provided with own control and adjustment organs. After proving the economic efficiency of applying statistical control, the paper presents a new form of its application, viz. the group method carried out by means of specialized electrical equipment.

Any industrial product, whether it is a machine-tool of an impressive size, a highly accurate electronic instrument or a widely used common product, is made up of a set of parts having accurate dimensions, determined by design. The more complex the product and the higher its qualitative requirements, the closer the tolerance limits of the manufactured parts should be and the stricter the technical conditions.

Modern products of a high technical level such as automatic machine-tools, computers, automatic telephone exchanges, the complex equipment used for cosmic flight or the mechanisms on the submarines which dive in the depths of the oceans, must be built of parts whose tolerances are often of the order of the thousandth or tenth of thousandth of a millimeter. The hundredth and thousandth of a millimeter have become normal tolerances for large series industrial products such as : electric motors, internal combus. tion engines, electrotechnical equipment, electrical and mechanical gauges, etc-

When the mechanical workshops were for the most endowed with universal machine-tools where the quality of every individual part was dependent on the attention and skill of the operator, the classical measuring methods, entailing the use of universal instruments (slide gauge, micrometer, comparer, microscope etc.) were suficient. However, the appearance of the automatic machine-tools rendered the classical control methods insufficent in view of assuring the checking of manufacturing accuracy and volume. (Nevertheless, there are still situations when the piece by piece control method is used in plants.) For example a Ruhla 652, Petterman, Tos AD 6, Skoda 20 automatic lathe not provided with own control and adjustment organs

yields 20—25 parts per minute. There results that in a normal 8-hour shift approximately 10,000 parts are completed. The sorting speed of a man using a gauge is approximately 1000 measurements/hour, respectively 7,000—8,000 measurements in a normal 8-hour shift. The numerical mean of the closely tolerated measurements for relatively simple parts processed on automatic lathes is 3, hence, for the 10,000 parts completed in one shift on one lathe, 30,000 measurements are necessary. The necessary number of men in case gauges are used for controlling all the parts proccessed in one shift at a single automatic lathe would be: $N = \frac{30,000}{8,000} = 3.75$. Taking into account normal resting time there results that four men are necessary for one shift.

A not too important workshop, having a number of 30 automatic lathes working in 3 shifts should therefore have, in case the parts are controlled by means of gauges in a proportion of 100%, a number of 360 sorters ($N_T = 30 \times 3N = 30 \times 3 \times 4 = 360$). To this number of sorters should be added 3 foremen (one for each shift) and 3 qualified workers to check the wear of the gauges and send the worn-out ones to be reconditioned, or else the number of gauges should be doubled.

In case the method of the absolute measurements of every single dimension is used (by means of universal measuring instruments) the number of controllers increases by 1/3 and likewise requires controllers having a high qualification, able to handle the controlling instruments and to read their markings with accuracy.

Piece by piece control cannot ensure that all the defective parts are removed from the manufacturing circuit, owing to the mistakes which may normally appear due to loss of attention after a great number of measurements. Likewise, piece by piece control does not prevent the appearance of unsatisfactory parts, since it only discovers the existence of the faulty parts after a relatively long time following their manufacture.

Therefore, piece by piece control was replaced by a mixed checking method: a number of qualified controllers check periodically the operation of the machine-tools; a number of sorters sort the unsatisfactory parts. As a checking scheme this method draws very close to that of a statistical control. The lack of a checking method based on an accurate mathematical calculus prevents the appearance of unsatisfactory parts from always being obtained in due time. The use of a statistical method for size control, adapted to the specific conditions prevailing in the workshop, leads to a decrease in control staff and to a reduction in the number of scraps. This result from table 1 which shows the comparative situation of the necessary staff and of the scraps found as a function of the control method adopted for a workshop using 30 automatic lathes (see table 1).

The first two types of control were practically eliminated concomitantly with the introduction of automatic machine-tools, since the number of controllers considerably exceeds the number of workers (4 workers can adjust and watch approximately 5 automatic lathes), so that for 30 lathes working 3 shifts, approximately 18 adjusters are necessary (besides the auxiliary operating staff).

The calculus of the wage cost of the control staff and of the waste through scraps is carried out according to the formula :

$$S = \sum_{i=1}^{n} C_i m_i + \sum_{k=1}^{m} R_k = M + R$$

where : $M = \sum_{i=1}^{n} C_i m_i$ = wages of control staff,

$R = \sum_{k=1}^{m} R_k$ = total scraps, both found in workshop and outside workshop, and

S = total sum of wage cost for control staff and losses through scraps.

Table 1

Symbols	Chosen control method	Control 100% with universal measuring instruments	Control 100% by gauges	Control in field combined with sorting	Statistical control in field and statistical probing	Mean wage
C_1	Unqualified controlleps	I	II	III	IV	
		—	360	30	4	$m_1 = 800$
C_2	Qualified controllers	480	3	14	15	$m_2 = 1\,100$
C_3	Specialized controllers	—	—	—	6	$m_3 = 1\,300$
C_4	Control foremen head of shift)	3	3	3	1	$m_4 = 1\,400$
C_5	Maintenance staff for instrument calibre	1	3	2	1	$m_5 = 1\,500$
R_1	Scrap percentage found in workshop	6%	6%	2%	0,5—1%	
R_2	Scrap percentage delivered from workshop	1%	1%	0,5%	0,2—0,4%	

*) The mean wage is estimated, beign only used as a base of calculation to compare costs represented by control staff wages in the 4 control types chosen.

Comparing S to the total production value — A — there results the percentage represented by the sums spent to achieve quality production by means of technical control and scrap elimination :

$$\eta\% = \frac{S}{A} \times 100 = \frac{\sum_{i=1}^{n} C_i m_i + \sum_{k=1}^{m} R_k}{A} \times 100$$

The coefficient η which shows how high these expenses rise in view of obtaining a qualitatively satisfactory production, is particularly important from the economical standpoint, since it reflects both the technical level

of manufacturing and the efficiency of the production quality control methods. The smaller the coefficient η the more adequate the production quality and the chosen control method.

As previously shown the first two types of control (respectively the control in a 100% proportion by means of universal measuring instruments and the piece by piece control made by means of gauges) have been eliminated for automatic machine-tools, owing to the fact that the coefficient η is unacceptably large.

In the example stated above, these costs, referred to a total production of 1,000,000 lei, would, amount to :

In case I

$$\eta_{\text{I}} = \frac{\sum_{i=1}^{5} C_i m_i + \sum_{k=1}^{2} R_k}{A} \times 100 =$$

$$= \frac{480 \times 1{,}100 + 3 \times 1{,}400 + 1 \times 1{,}500 + 60{,}000 + 10{,}000}{1{,}000{,}000} \times 100$$

respectively $\eta_{\text{I}} \cong 60\%$

In case II

$$\eta_{\text{II}} = \frac{360 \times 800 + 3 \times 1{,}100 + 3 \times 1{,}400 + 3 \times 1{,}500 + 60{,}000 + 10{,}000}{1{,}000{,}000} \times 100$$

respectively $\eta_{\text{II}} \cong 37\%$

In some plants there is a tendency to assert that total control is carried out, although the number of controllers employed does not allow such a control to be carried out. The lack of a satisfactory control method leads in this case, although the factor M is sufficiently low, on account of the increase of the factor R, (respectively the scraps and particularly the scraps found outside the workshop to which are also to be added the supplementary processing or assembling manual labour) to a large coefficient η ($\eta > 20\%$).

A satisfactory control solution is that of periodically checking the operation of the machine-tools by a limited number of qualified controllers and the use of sorters for the piece by piece control of the parts having a greater frequency of faults. In this case field control is carried out by means of universal measuring means or of gauges, and the machine-tools are only stopped when the tolerance limits have been exceeded. This method cannot prevent the appearance of faulty parts, and the number of scraps is rather large, as well as the number of necessary sorters.

For this case (case III in table I), one can likewise calculate the coefficent η.

$$\eta_{\text{III}} = \frac{\sum_{i=1}^{5} C_i m_i + \sum_{k=1}^{2} R_k}{A} \times 100 =$$

$$= \frac{30 \times 800 + 14 \times 1{,}100 + 3 \times 1{,}400 + 2 \times 1{,}500 + 20{,}000 + 5{,}000}{1{,}000{,}000} \times 100$$

respectively $\eta_{\text{III}} \cong 7\%$.

The introduction of statistical control in such a mechanical workshop has lead to an important decrease in value of the coefficient η. Particular stress was laid on the periodical checking of the machine-tools according

to one of the well-known statistical methods (on basis of the median and the amplitude) [1], this determining the preventive stopping of the machine-tools before they were liable to produce inadequate parts.

This required a body of better trained controllers (6 controllers to interpret mathematically the results of the measurements) and reduced substantially the number of sorters, since the number of unsatisfactory parts in a group were included within the accepted risks.

The machines being stopped preventively, greatly reduced scrap coefficients were reached, in comparison to the previous situations. According to column IV in table 1, the coefficient η is :

$$\eta_{IV} = \frac{4 \times 800 + 15 \times 1,100 + 6 \times 1,300 + 1 \times 1,400 +}{1,000,000}$$

$$\frac{+ 1 \times 1,500 + 7,500 + 3,000}{1,000,000} \times 100$$

respectively $\eta_{IV} \cong 4\%$.

For a total production of 1,000,000 lei in this workshop the 3% decrease of the coefficient η (from $\eta = 7\%$ to $\eta = 4\%$) represents a saving of 30,000 lei. At present, a great number of workshops are endowed with such machines, favourable conditions being thus created in view of applying one of the forms of statistical control and of thus obtaining important savings.

1. STATISTICAL CONTROL METHODS USED FOR SIZE CHECKING DURING THE TECHNOLOGICAL PROCESS.

The correct statistical control method is chosen by previous analysis of the technological process which must establish :

1) The main features of the machine-tools in the respective work-shop (working accuracy of each machine and its evolution in time : productivity of each machine-tool; optimum processing rate such as advance, r.p.m. etc. for various materials and sizes; frequency of machine-tool misadjustment; frequency with which processing tools wear out).

2) The main features of the parts manufactured in view of their optimum distribution by machines (tolerances of parts and more important sizes to be strictly adhered to in manufacture, quantity of group of parts to be manufactured; materials from which they are manufactured etc.).

3) The specific conditions of the workshop from the standpoint of staff training, of vibrations, of control and measuring gauges etc.

An essential problem of the various statistical control methods is that of fixing the measurement limits in relation with the tolerance range of the parts to be checked and of the admitted risk.

The most common statistical methods used to control the technological process are : the method of the arithmetical mean and of the mean square deviation; the method of the arithmetical mean and of the scattering amplitude; the method of the median and of the scattering amplitude; the method of the median and of the extreme values; the method of the ordinate samples;

the method of the distribution gauges. The specialty technical literature gives a theoretical base and developes these statistical control methods based on the measurement of the true value of the size of the parts to be controlled at regular time intervals, recording the results on control diagrams and interpreting them in view of monitoring the technological processes [2, 3].

At the "Electromagnetica" plant, in Bucharest, in view of controlling the operation of the automatical and semi-automatical machine-tools one applies the group method, derived from that of the distribution gauges adjusted to limits closer than the limits of the tolerance range.

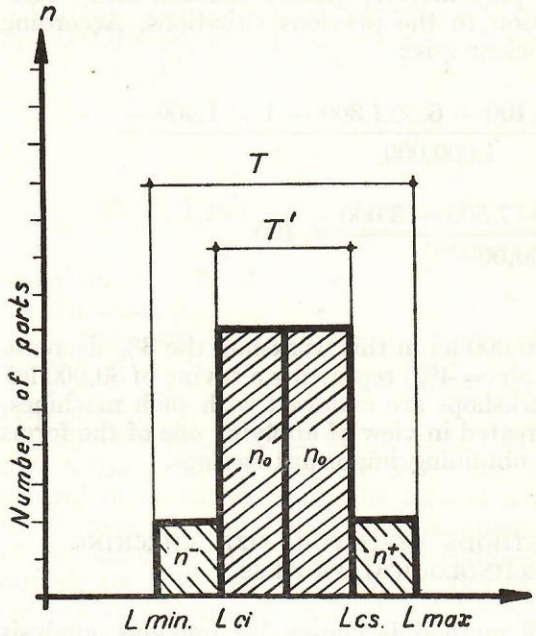

Fig. 1

The group method consists in determining a closer preventive tolerance range than that required by blueprints and watching the mode of distribution of part sizes with respect to this range in the course of manufacturing.

The tolerance range of one part is :

$$T = L \text{ max.} - L \text{ min.}$$

where

L max. = maximum limit of tolerance range

L min. = minimum limit of tolerance range.

The preventive tolerance range will be :

$$T' = L_{cs} - L_{ci}$$

where

L_{cs} = upper control limit
L_{ci} = lower control limit
$L_{cs} = L \text{ max.} - Z_c$
$L_{ci} = L \text{ min.} + Z_c$

where Z_c is determined as a function of the machine-tool accuracy and of the processing to be carried out.

Fig. 1 shows the tolerance range and the narrower tolerance range for the case where $T' = \frac{1}{2} T$.

The characteristic values in the part sizes within the tolerance range divide the manufactured parts into 3 separate groups :

— parts whose sizes are below the lower control limit (L_{ci}), whose number is noted by n^-;

— parts whose sizes are above the upper control limit (L_{cs}), whose number is noted by n^+;

— parts whose sizes are between the two preventive control limits, whose number is noted by n.

To be able to apply effectively the group method in manufacturing control it is necessary to consider two parameters :

— parameter of machine-tool adjustment $(n^+ - n^-)$;

— parameter of machine-tool accuracy $(n^+ + n^-)$.

A) *Determining of parameter indicating how the machine-tool has been adjusted* $(n^+ - n^-)$ *and of the parameter showing the machine-tool accuracy at a given moment* $(n^+ + n^-)$.

The parameter $(n^+ - n^-)$ admits certain maximum limit values from the standpoint of adjustment and accuracy, which should be determined in close relation with the conditon in which the production process occurs and in the first place as a function of the value of the machine accuracy parameter.

The limit values of the above parameter were noted by $n' \geqslant (n^+ - n^-)$ and $n'' \geqslant (n^+ + n^-)$ and they can be determined in two cases :

a) When the centre of adjustment coincides with the tolerance range centre, which is approximately equal to the centre of the scattering range (in this case the accuracy parameter q is : $0.01 < q < 0.02$).

b) When the centre of adjustment is within the zone determined by the preventive control limits (L_{cs} and L_{ci}), this implying a higher accuracy $(q < 0.1)$.

When the values of the parameters $(n^+ - n^-)$ and $(n^+ + n^-)$ do not exceed the numbers n' and n'' there results that the technological process is normal. If the values of these parameters exceed the numbers n' and n'' there results that the accuracy characterized by the parameter q is no longer observed, the normal development of the production process being broken from the standpoint of adjustment and accuracy.

When determining the limit values n' an n'' a certain risk q_1 is admitted. For instance if the risk of degree I $[q = 0{,}005]$ is admitted there results that from 1,000 samplings of 5...10 parts tested, the conclusions drawn will e ofavourable in 995 cases, while in 5 cases the adjustment of the machine-totil will be considered to be unsatisfactory, whereas it may, actually, be sabsfactory. This will eventually lead to 5 useless adjustments of the machi--netool out of 1,000 adjustments made within a month.

The numbers n' and n'' are obtained from tables* as a function of the risk q_1 which is so chosen as to be approximately equal with the value of the accuracy parameter q. The tables are established for situations where samplings of 5...10 parts are periodically tested, the values often found in practice being used.

The first column of table 1.3 shows the size n of the chosen sample, In the second column there is the parameter $n' \leqslant (n^+ - n^-)$ (respectively, the upper limit of parameter n'). The headings of the other columns show the values of the accuracy parameter q and $Z_q = T/2\sigma$ where T is the tolerance range, and σ the mean square deviation calculated on basis of 100...300 measurements.

Z_q is to be computed. The corresponding value of q is chosen (a close or smaller value is sought, so as to minimize the possibility of an error). For the risk q found, the table shows the value of the parameter $n' \geqslant (n^+ - n^-)$

*) Tables for several values of the risk are given in „Metode şi aparate electrice pentru controlul statistic al dimensiunilor (Electrical instruments and methods for the statistical control of sizes) by F. Mangiurea and Al. Calista, tables 1.3 and 1.4, pp. 32—33.

require for the techological process to unfold normally. The value of the parameter $n'' \geqslant (n^+ + n^-)$ is determined analogously from table 1.4.

The calculations are the easier, the better the mean square deviation for each machine-tool is known, from the accuracy calculation made in view of the optimum distribution of the parts by machines.

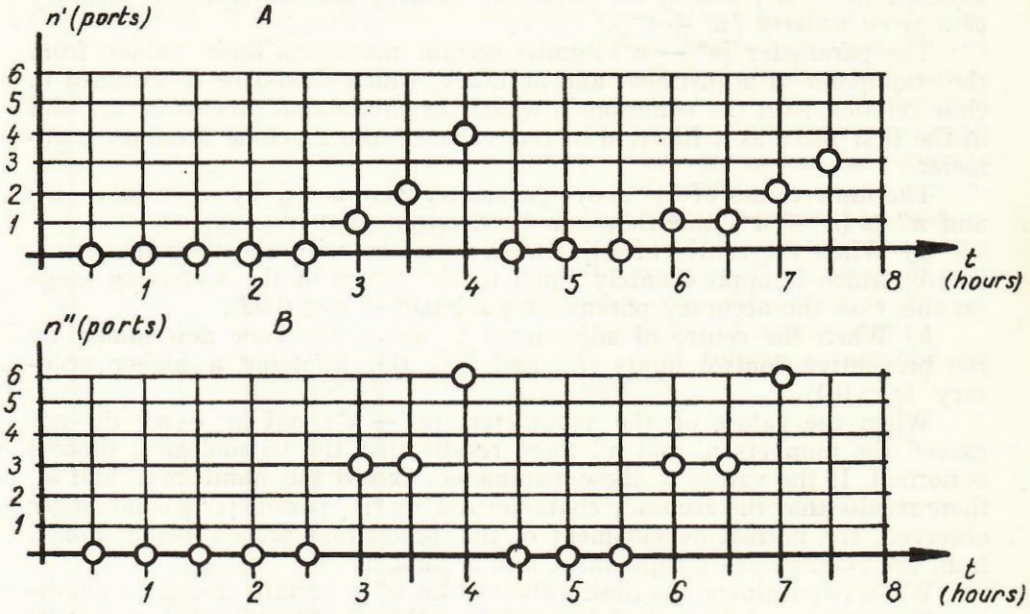

Fig. 2

B) *Determination of the lower and upper control limits L_{ci} and L_{cs}, and of the average interval between two misadjustments.*

The mean square deviation being known and the value of the parameter $Z_q = T/2\sigma$ calculated, one determines, also from tables 1.3 and 1.4, the value of the parameter Z_0 necessary to calculate the preventive control limits L_{ci} and L_{cs}.

As already shown these limits are given by the formulae :

$$L_{ci} = L_{min} + Z_c ; \; L_{cs} = \text{L max.} - Z_c$$

The determination of the average interval between two misadjustments is used to establish the time interval between the periodic checking of the machines.

The statistical parameters (n' and n'') are checked every 1/2 hour, their value being plotted on a simple graph.

Let us assume that for 6 part samplings there results from calculation $(n^+ - n^-) \leqslant 2$ and $(n^+ + n^-) \leqslant 3$. Fig. 2A and B shows the variation graph of the parameters n' and n'' for an 8-hour shift. (the measurements were carried out every half hour on a number of 6 parts).

It is noticed that, in general, the machine becomes misadjusted every $3\frac{1}{2}$ hours of operation. The establishment of periodic checking every 2 hours is sufficient to prevent faults or misadjustments that may occur.

The working method in the workshop, by using the group method is considerably simplified, being achieved as follows:

a) at determined time intervals a restricted number of parts (selections) previously established (5—10 parts) are taken from the machine-tool.

b) The numbers n^+ and n^- are determined by means of universal gauges or of mechanical or electrical instruments adjusted to the preventive control limits (L_{ci} and L_{cs}).

The parameters $(n^+ - n^-)$ and $(n^+ + n^-)$ are calculated, care being taken that they should not exceed the calculated values n' and n''.

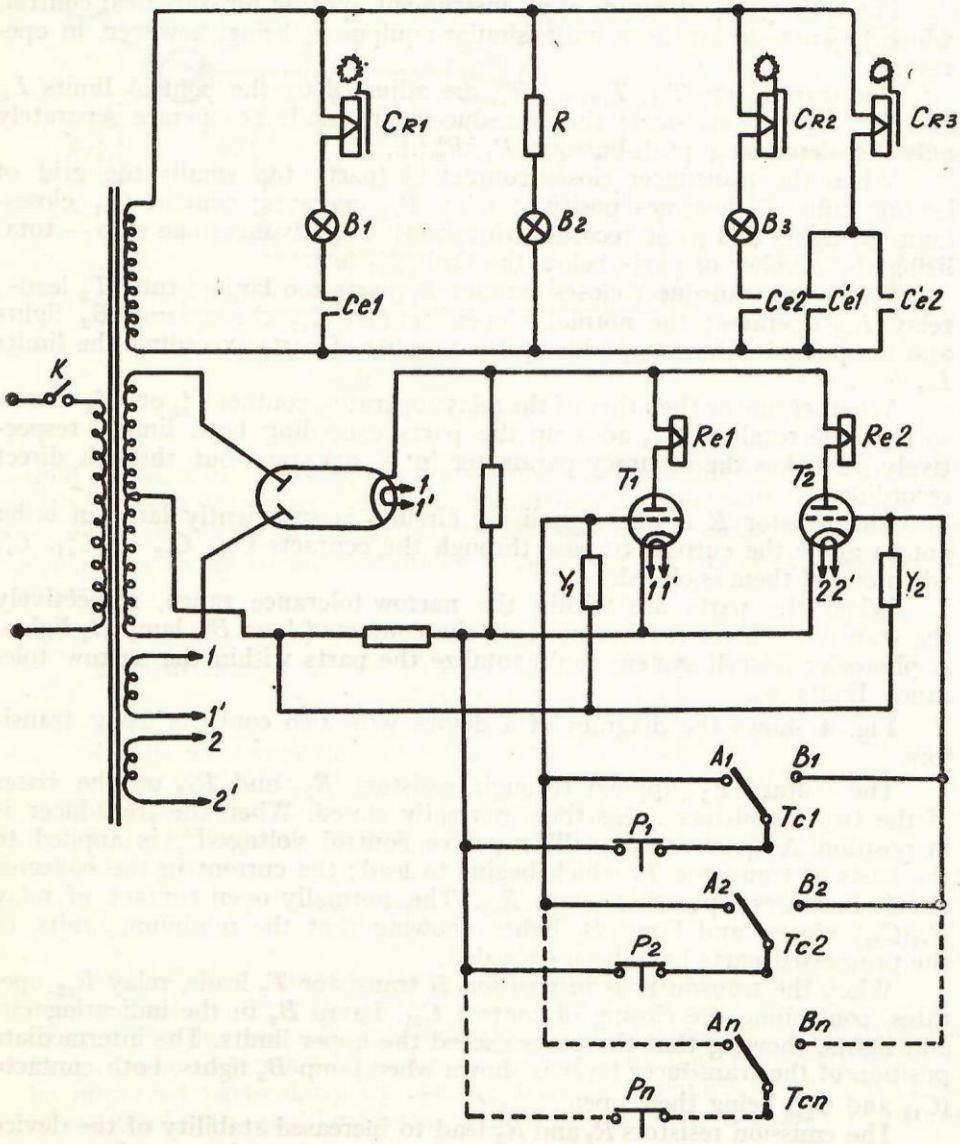

Fig 3

c) The necessary indications are given to production when the adjusting parameter $(n^+ - n^-)$ is unsatisfactory $(n^+ - n^- < n')$ and there is a danger of exceeding the tolerance limits during the following time interval. The machine-tool should be stopped for adjustment.

In case parameter $(n^+ + n^-)$ is unsatisfactory $(n^+ + n^- > n'')$ even if parameter $(n^+ - n^-)$ is satisfactory, the operation is transferred onto another machine-tool since the accuraoy of the machine on which the work was carried out did not correspond to the requirements of the assigned tolerance range.

Fig. 3 shows the diagram of an instrument, specific for statistical control, which has not, so far, been built, similar equipment being, however, in operation.

The transducers T_{c1}, T_{c2}, ..., T_{cn} are adjusted to the control limits L_{ci} and L_{cs} for various sizes; the transducers are made to operate separately only by depressing push-buttons P_1, P_2, ..., P_n.

When the transducer closes contact A (parts too small) the grid of leading tube T_1 becomes positive; relay R_{e1} operates; contact C_{e1} closes-lamp B_1 lights and pulse recorder (totalizer) C_{R1} advances one step — tota, lizing the number of parts below the limit L_{ci} (n^-).

When the transducer closes contact B (parts too large); tube T_2 leads; relay R_{e2} operates; the normally open contact C_{e2} closes, lamp B_2 lights and the pulse totalizer C_{R2} adds up the number of parts exceeding the limits L_{cs} (n^+).

Whether one or the other of the relays operates, contact C'_{e1} or C'_{e2} closes, so that the totalizer C_{R3} adds up the parts exceeding both limits, respectively, it makes the accuracy parameter $(n^+ + n^-)$ stand out through direct recording.

The resistor R in the signalizing circuits is sufficiently large in order not to allow the current to pass through the contacts C_{e1}, C_{e2} or C'_{e1}, C'_{e2} when one of them is closed.

When the parts are within the narrow tolerance range, respectively the transducer lever reaches none of the contacts (A or B), lamp B_3 lights. A photoelectric cell system could totalize the parts within the narrow tolerance limits n_0.

Fig. 4 shows the diagram of a device with two contacts using transitors.

The voltage E_b, applied through resistors R_{b1} and R_{b2} on the bases of the two transistors keeps them normally closed. When the transducer is in position A (parts too small) negative control voltage-U_e is applied to the basis of transistor T_1 which begins to lead; the current in the collector circuit increases, operating relay R_{e1}. The normally open contact of relay $R_{e1}(C_{11})$ closes, and lamp B_1 lights showing that the minimum limits of the proccessed parts have been exceeded.

When the transducer is in position B transistor T_2 leads, relay R_{e2} operates, controlling the closing of contact C_{21}. Lamp B_2 in the indicating circuit lights, showing that the parts exceed the upper limits. The intermediate position of the transducer lever is shown when lamp B_3 lights, both contacte (C_{11} and C_{21}) being then open.

The emission resistors R_1 and R_2 lead to increased stability of the device in relation to temperature variation assuring, by negative reaction, opera-

tion with a constant collector current. Longer life of the transistors is ensured by choosing low collector voltage.

Capacitors C_1 and C_2 are mounted in parallel with the relay windings in view of avoiding armature vibration. In case high collector voltage is

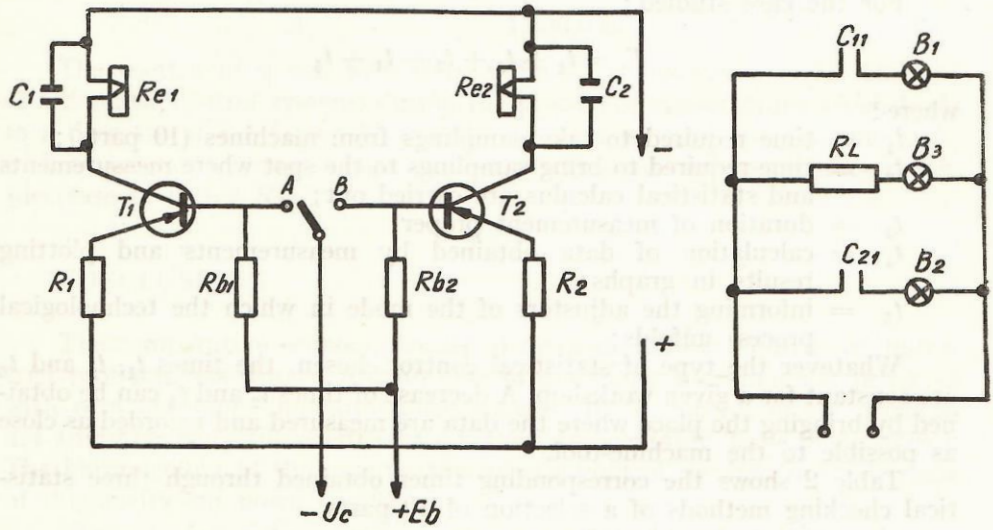

Fig. 4

used or when high voltage appears when disconnecting circuit RL formed by the relay windings, a diode is mounted in parallel with the relays.

The simplicity of the principle diagrams of the electrical devices used constitute an important advantage in applying statistical methods for size control.

2. COMPARISON OF RESULTS FOR THE VARIOUS METHODS OF STATISTICAL CONTROL

Results were compared by calculating the coefficient η for various methods of statistical control applied to a workshop with automatic machine-tools not provided with own control and adjustment organs.

From previous discussions there results that η is dependent on two variable factors:

$$M = \sum_{i=1}^{n} C_i m_i \text{ and } R = \sum_{k=1}^{m} R_k.$$

The results obtained in the application of statistical control have made evident that whatever the method chosen, for machine-tools of a given degree of accuracy, one succeeds in preventing the appearance of scraps, which are kept to a predetermined, low level. There results that the coefficient η can be improved particularly by chosing a method requiring less control staff of not too high a qualification, as well as by providing mechanized and automatized measurements.

The total control time is considered to be composed of the sum of times necessary for the various operations carried out by the controllers in the field: $T_c = \sum_{i=1}^{n} t_i$

For the case studied:

$$T_c = t_1 + t_2 + t_3 + t_4 + t_5$$

where:

t_1 = time required to take samplings from machines (10 parts);
t_2 = time required to bring samplings to the spot where measurements and statistical calculus are carried out;
t_3 = duration of measurement proper;
t_4 = calculation of data obtained by measurements and plotting results in graphs;
t_5 = informing the adjustors of the mode in which the technological process unfolds;

Whatever the type of statistical control chosen, the times t_1, t_2 and t_5 are constant for a given workshop. A decrease of times t_2 and t_5 can be obtained by bringing the place where the data are measured and recorded as close as possible to the machine-tool.

Table 2 shows the corresponding times obtained through three statistical checking methods of a selection of 10 parts.

Table 2

	Statistical control methods based on measurement	Group method using universal gauges	Group methods using mechanical and electrical divices adjusted to preventive limits
	minutes	minutes	minutes
t_1	1	1	1
t_2	1	1	1
t_3	3	3	30″
t_4	3	1	1
t_5	1	1	1
Total	T_{c1} — 9 minutes	T_{c2} — 7 minutes	T_{c3} = 4,5 minutes

When coefficent η was calculated for the case of statistical control (according to table 1) the result was:

$$\eta_{IV} = \frac{M + R}{A} \times 100 = \frac{29{,}900 + 10{,}500}{1{,}000{,}000} \cong 4\%$$

Since R and A are constant the coefficient η can be calculated for statistical control by the group method applied with universal gauges

$$\eta'_{IV} = \frac{M \frac{T_{c2}}{T_{c1}} + R}{A} = \frac{\frac{7}{9} \times 29{,}900 + 10{,}500}{1{,}000{,}000} \cong 3.4\%$$

and the same coefficient for the group method using electrical and mechanical instruments adjusted to the control limits (η''_{IV}).

$$\eta''_{IV} = \frac{\frac{T_{c3}}{T_{c1}} M + R}{A} = \frac{\frac{4.5}{9} \times 29{,}900 + 10{,}500}{1{,}000{,}000} \cong 2.5\%$$

The coefficient η can further be reduced in two main ways. The use of automatic control systems during the process of manufacture which leads to a decrease of the factor M and the use of most accurate machine-tools, with a narrower tolerance range, to allow working with an ever smaller risk q_1 (decrease of factor R).

CONCLUSIONS

The comparative economic study of methods for size control of industrial products has proved that in case of automatic machines not provided with own checking and adjustment organs, 100% control of the parts is not advisable since the coefficient η is then unacceptably large (60%, 37%). The improvement of the organization of size control resulted in a decrease of this coefficient down to 7%.

The use of statistical methods for the control of production, based theoretically on mathematical statistics and on the calculus of probability, has allowed a further decrease of wage costs for the control staff and of waste through scraps (4%). In turn, the improvement of the statistical control methods has allowed the coefficient η defined above, to decrease to 4% in case classical statistical control methods are used, and to 2.5% when the group method is used, checking devices specific to this form of control being employed.

The continuous development of technique and the use of constantly improved machine-tools demand a continuous evolution of the control methods and, concomitantly, a decrease in the expenses which they imply and in the losses through scraps. The surest way of obtaining a continuous increase of labour productivity is the promotion of technical progress in all fields of activity and, the more so, in industry.

BIBLIOGRAPHY

1. F. Mangiurea and Al. Calista. *Metode şi aparate electrice pentru controlul statistic. al dimensiunilor (Electrical instruments and methods for the statistical control of sizes)* Editura tehnică, 1963, pp. 19—23.

2, N. Rancu and L. Tövissi *Statistica matematică cu aplicaţii în producţie (Mathematical statistics with applications in production)*. Editura Academiei RSR, 1963, pp. 275—419.

3. N. Rancu and L. Tövissi *Analiza statistico-matematică a calităţii producţiei industriale (Statistical-mathematical analysis of industrial production quality)*. Editura Ştiinţifică. 1964, pp. 89—127.

ÉTUDE DE L'EFFICACITÉ ÉCONOMIQUE DES MÉTHODES STATISTIQUES DE CONTRÔLE DES DIMENSIONS DES MACHINES-OUTILS AUTOMATIQUES

L'étude présente comparativement, du point de vue de l'efficacité économique, l'applition des différents types de contrôle dans un atelier avec tours automatiques sans organes propres de contrôle et réglage.

Les autres démontrent l'inefficacité du contrôle 100% à l'aide d'instruments universels de mesurage, ainsi que du contrôle à l'aide de calibres limitatifs. De même, ils montrent qu'il est plus convenable d'appliquer le système de contrôle au lieu même combiné avec l'assortiment des parties inadéquates.

L'étude démontre ensuite l'efficacité économique de l'application du contrôle statistique, qui non seulement permet la réduction du personnel nécessaire pour le contrôle, mais empêche aussi l'apparition de parties inadéquates, en limitant les rebuts. Le coefficient en (qui indique le montant des dépenses pour les salaires du personnel de contrôle et des pertes en rebuts rapporté à la valeur de la production globale) diminue dans l'exemple concret analysé, dans le cas où le contrôle statistique est explicité à 4% au lieu de 60%, lorsqu'on utilise le contrôle pièce par pièce à l'aide d'instruments universels de mesurage.

Une forme nouvelle d'application du contrôle statistique revient à employer la méthode de contrôle statistique de groupement dérivée de la méthode des calibres de distribution, à l'aide des appareils électriques spécialisés. Cette méthode contribue à accroître la productivité des travaux de contrôle.

ИЗУЧЕНИЕ ЭКОНОМИЧЕСКОЙ ЭФФЕКТИВНОСТИ СТАТИСТИЧЕСКИХ МЕТОДОВ РАЗМЕРНОГО КОНТРОЛЯ НА СТАНАХ-АВТОМАТАХ

В статье сравнитезьно приводится с точки зрения экономической эффективности применение различных видов контроля в цехе токарных автоматов, не имеющих собственных органов контроля и наладки.

Указывасется неэффективность полного контроля при помощи универсального измерительного инструмента и при помощи органичительных калибров. Указывается также, что система контроля на местах в сочетанин с сортировкой несоответствующих деталай уже устарела.

Авторы указывают экономическую эффективность применения статистического контроля, при помощи которого, помимо сокращения еeобхооимого для контроля персонала, предотвращается появзение несоответствующих деталей и органичивается брак.

Козффицпент п (указывающий сколько составляют расходы на заработную плату персонала контроля и потери из-за брака по отношению к стоимости валовой продукции) снижается в рассматриваемом конкретном цримере при применении статистического контроля до 4% вместо 60% при цримении щтучного контроля при помощи универсального измерительного инструмента.

Новой формой применения статистического контроля является контролъ при помощи специальных злектроприборов, на которых применяется метод статистического контродя группировки, вытекающий из метода распредельных калиборов. Это способствует повышению производительндсти труда при контроле.