M. STOICA
A. BRŪDER

Digital Simulation of Work Processes

There is presented a simulation algorithm of work process where cyclic activities of constant duration appear, and perturbating evens too which lead to the developing necessity of some activities with random durations

1. INTRODUCTION

The methods of simulation and the analytic techniques of the work processes have developed these latest years at a very rapid rate. Nevertheless, simulation of work processes is at its beginning, its evolution being slower than the study of simulation or of the work process, considered separately.

The method of simulation requires the use of computers.

In applying numerical techniques to the analysis of the work process, the Wofac Company achieved an important progress, by elaborating a program in FORTRAN.

Here we shall deal with some aspects of this new field which combines both simulation and work study.

In most cases the available information concerns processes having taken place in the past, their further development being aimed at. By means of simulation we can predict the behaviour of the process considered.

A cybernetic diagram of the iterative process of knowledge of the work process development through simulation is given in Fig. 1. It follows therefrom that the design of the work process can be achieved in two stages:

Stage I. In agreement with some primary information concerning the work process, a simulating model is drawn up. In most instances, such information relates to: time consumption, power consumption (e. g. calories consumption), specific consumption of materials, output quality, etc. Of these parameters, only time consumption was particularly studied.

With respect to other parameters which may interfere when simulating the work process, difficulties arise in obtaining the required primary information, although there is no obstacle from the standpoint of the models.

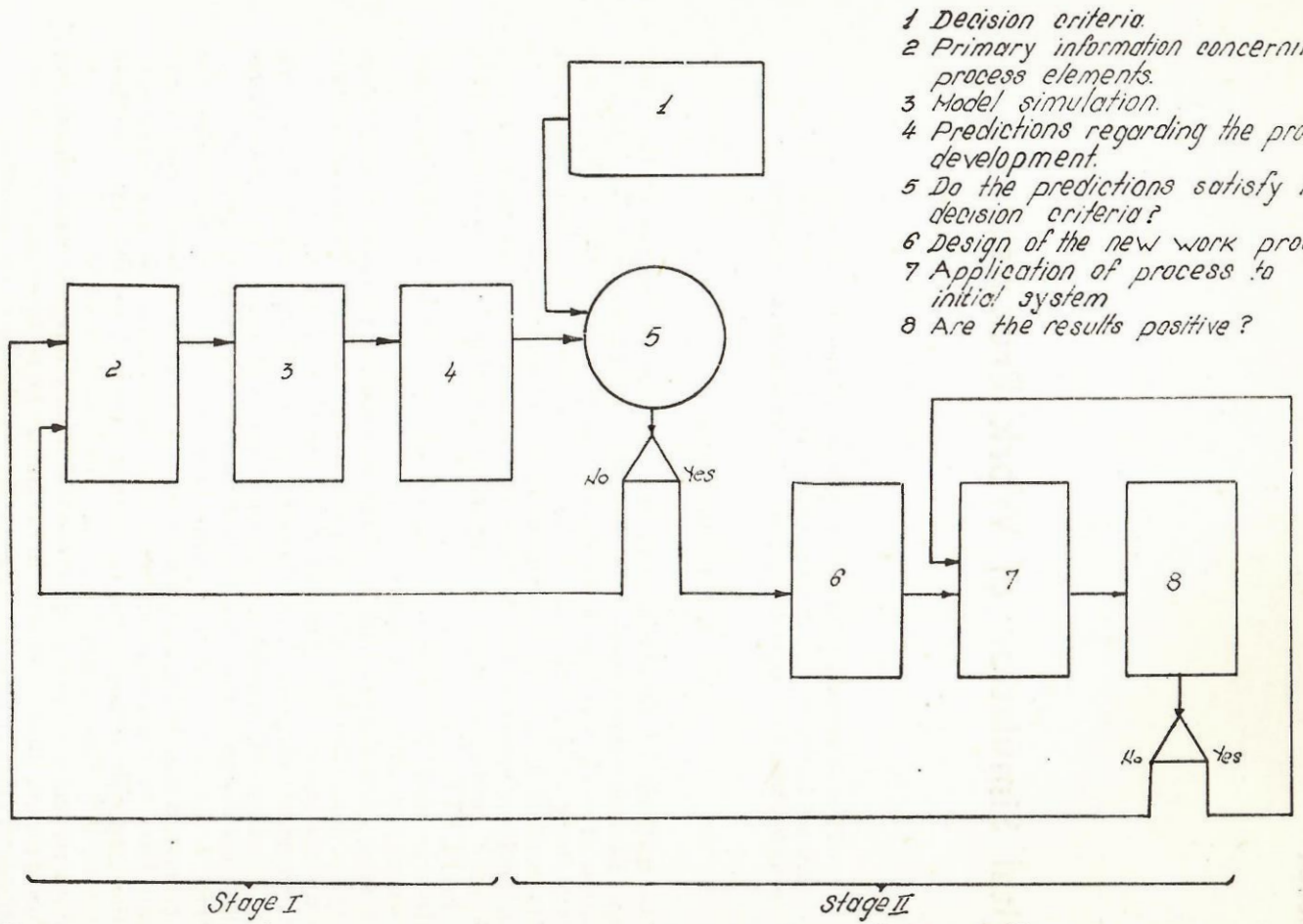

Fig.1. A cybernetic diagram showing the iterative process of knowledge of the work process development trough simulation.

As a result of simulation, predictions on the probable development of the work process are made. In this stage, optimization is not yet aimed at. In certain instances, this stage may however suffice for securing estimated computation elements of an overall character, which can be used in planning.

Stage II. In this stage, both the results of simulation in stage I and a number of decision criteria are used. The latter have the character of restrictions or optimization conditions. To state these criteria either initially set parameters or relative values, obtained after consecutive simulations, are used. If the decision criteria are not satisfied, or if we do not know they are satisfied, primary information is modified and — if necessary — even the simulating model is revised. The iterations are repeated until the set criteria are satisfied. In agreement with the parameters satisfying the decision criteria, the improved work process is designed. Further, the work process is applied in the framework of the original system. This check up in accordance with the original system may score negative results, which make us go back to the circuit, starting with stage I, or, stage II is used in view of optimizing the production process and checking up in the original system.

2. SIMULATION OF WORK PROCESSES

The simulation method is very advantageous for the possibilities it offers, but, at the same time, it is quite laborious due to the preparations it requires. It is therefore recommended only for large series processes (mechanical processing, assembling etc.). It can be also applied in the case of small series processes or even unique activities of special importance (such as prototype construction, repairing, overhaulings etc.).

For the requirements of current economic branches, the former case is of particular interest. In most cases, the large series work processes acquire a cyclic character. Going thoroughly into analysis we establish that, in fact, each process is composed of cyclic activities and of some non-cyclic activities. Thus, even processes which apparently are not cyclic may be considered as being composed of cyclic and non-cyclic activities. For example, in overhauling, revision or maintenance processes which in general are considered as being non-cyclic, the following scheme can be found:

1. Disassembling activities, in view of clearing up;
2. Clearing up and decision making activities;
3. Carrying out the required type of overhauling;
4. Re-assembling.

Irrespective of the circumstances, activities 1 and 4 take place, and their durations are approximately equal. Activity 2 always occurs, but its durations are quite uneven. Activity 3 may, in some cases, be missing, while in other cases it may appear, its duration depending on the type of the overhauling. Thus activities 1 and 4 are cyclic, while activities 2 and 3 are generated by perturbing events. The occurence probability of a perturbing event in a very short interval of time is influenced by the time elapsed between two successive occurences of the same event. On the basis of this interpretation of the development of work processes in time intervals, different analyses may be initiated by simulation on an electronic computer.

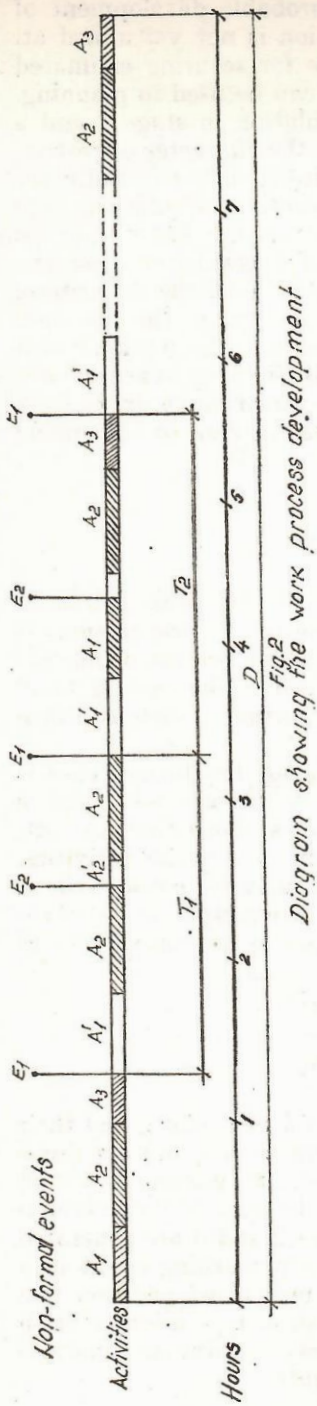

Fig.2 Diagram showing the work process development

The simplifying methods utilized do not restrain the generality of the model. The particularities of the different work processes which are quite frequent in practice may be included due to the variety of the enclosed perturbing events.

Consider n cyclic activities A_1, A_2, ..., A_n, taking place in accordance with a set program and having constant durations: t_1, t_2, ... t_n.

These activities are accompanied, with a certain probability, by the perturbing events E_1, E_2, ..., E_m, which alter the regular development of the activities. These events lead to the necessity for the workers to perform a number of random activities A'_1, A'_2, ..., A'_m. The problem arises of simulating the development of the work process in a certain interval of time (for example, in 8 hours).

The occurence probability of such an event depends, as shown, in the interval elapsed since the last considered event has taken place. Let T_{ik} be the moment the event E_i occured. The index k shows how many times the event E_i occured since the initial moment. For instance, in Fig. 2 the event E_1 occured three times in 5 hours. Admitting the time zero as initial moment,it results $T_{13} = 5$ hours.

Considering a moment $T > T_{ik}$, the probability of event E_i to occur at the moment $t(T_{ik} < < t \leqslant T)$, that is $(k + 1)$ times depends on the difference:

$$\Delta T_{ik} = T - T_{ik}$$

thus the probability has the form:

$$P[\, T_{ik} < t \leqslant T] = \psi_i(T - T_{ik}) = \psi_i(\Delta T_{ik})$$

The time interval ΔT_{ik} must be chosen sufficiently short, so that the probability of simultaneous occurence of two elementary events E_i and $E_j (i \neq j)$ beteen two moments T_{ik} and $T_{ik} + + \Delta T_{ik}$ may be as a matter of fact negligible.

With a view to practically tackle the problem, relative frequencies are used, which estimate probabilities with a certain approximation. In order to compute these frequencies, it is necessary to make a number of ascertainments according to the following stages:

2.1. **Computing the frequencies of a time interval** θ_{ij} elapsed between two consecutive occurences of an event E :

— a ratio $\Delta\theta_i$ (for the event i) is chosen;

— an arithmetical progression of ratio $\Delta\theta_i$ is formed: θ_{i0}; $\theta_{i0} + \Delta\theta_i$; $\theta_{i0} + 2\Delta\theta_i$, ... $\theta_{i0} + j\Delta\theta_i$ ... $\theta_{i0} + p_i\Delta\theta_i$

The duration θ_{i0} is the minimum of the interval elapsed between two successive occurances of the event E_i.

In general, the time elapsed between two consecutive occurences of the event E_i is: $\theta_{ij} = \theta_{i0} + j\Delta\theta_i$.

— the number of occurences f_{ij} of the time $\theta_{i0} + j\Delta\theta_i$, more exactly the number of durations comprised between

$$\theta_{i0} + \left(j - \frac{1}{2}\right)\Delta\theta_i \text{ and } \theta_{i0} + \left(j + \frac{1}{2}\right)\Delta\theta_i$$

is recorded.

2.2. Computing the duration of random activities A_i

In a similar way, the durations of the random activities which also depend on the interval elapsed since the latest event has taken place up to the moment considered, are studied.

— An interval $\Delta\tau_i$ (for the event i) is chosen;

— An arithmetical progression of ratio $\Delta\tau_i$ is formed:

$$\tau_{i0};\ \tau_{i0} + \Delta\tau_i;\ \tau_{i0} + 2\Delta\tau_i;\ \ldots\ \tau_{i0} + j\Delta\tau_i;\ \ldots\ \tau_{i0} + q_i\Delta\tau_i.$$

The duration τ_{i0} is the minimum of the interval elapsed between two successive occurences of the event E_i.

In general, the duration of operation A'_i required to be performed after the event E_i has occured is $\tau_{ik} = \tau_{i0} + k\Delta\tau_i$.

— The number of occurences φ_{ik} of the duration comprised between

$$\tau_{i0} + \left(k - \frac{1}{2}\right)\Delta\tau_i \text{ and } \tau_{i0} + \left(k + \frac{1}{2}\right)\Delta\tau_i \text{ is recorded.}$$

2.3. Finding the correlation matrix

The correlation matrix is found between τ_{ik} and θ_{ij}. By ψ_{ijk} we denote the number of occurences of the duration τ_{ik} after a time interval θ_{ji}. (See table 1). The absolute frequencies ψ_{ijk} turn into relative frequencies.

If an activity whatever A_h is considered, the perturbing event may occur before the activity has started, while it is being carried out, or after it has ended. However, taking into account that a duration whatever t_h of the activity A_h is in most cases much shorter than the duration of the interval between two perturbing events, we can assume the random activities to practically interpose only at the beginning and at the end of two activities with constant duration. (See Fig. 3).

3. COMPUTATION PROCEDURES

After these preliminary stages, we can proceed to the digital simulation of the work process development considered. To this end, the Monte-Carlo method is used.

Table 1

The correlation matrix

Time interval between two consecutive occurrences of event E \ Durations of random activities		Durations	$\tau_{i1}\ \tau_{i2}\ \ldots\ldots\ldots\ldots\ldots\tau_{iq_i}$
		Frequencies	$\varphi_{i1}\ \varphi_{i1}\ \ldots\ldots\ldots\ldots\ldots\varphi_{iq_i}$
Intervals	**Frequencies**		
θ_{i1}	f_{i1}	$\psi_{i11}\ \psi_{i12}\ \ldots\ldots\ldots\ldots\ldots\ \psi_{i\ q_i}$	
θ_{i2}	f_{i2}	$\psi_{i21}\ \psi_{i22}\ \ldots\ldots\ldots\ldots\ldots\ \psi_{i\ q_i}$	
.	.	. . . . .	
.	.	. . . . .	
.	.		
.	.		
.	.		
.	.		
θ_{ip_i}	f_{ip_i}	$\psi_{ip_{i_1}}\ \psi_{ip_{i_2}}$	$\psi_{ip_iq_i}$

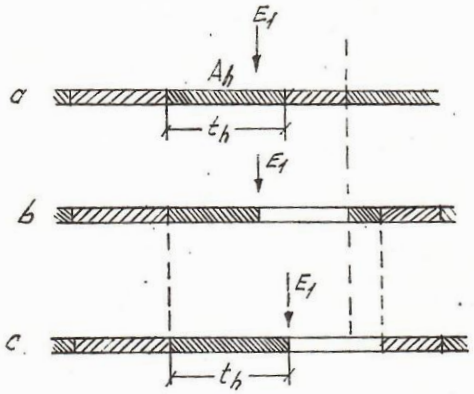

Fig. 3

Diagram showing the occurence of the random event

a. Occurence of random event
b. Actual diagram showing the chaining of cyclic and random activities (split of activity)
c. Conventional diagram of cyclic and random chaining (non-split of activity)

As known, the Monte-Carlo method can reproduce a multitude of possible concatenations of some parameters, on the basis of successive extractions of random numbers which are realizing a correspondence. In the case of the work process, knowing the durations of some elements (cyclic and non-cyclic activities) and observing certain restrictions, different situations able to be reproduced in fact during the development of the work process, are realized, by successive extractions of random numbers. This game depends upon the established empirical distributions. The Monte-Carlo method lends itself to treating a great variety of work processes, being more adequate than other methods, as for example queuing, as it allows the carrying out of computations in the hypothesis of any empirical distributions and succeeds in taking into account any sort of restrictions.

Two methods can be applied in order to generate the random numbers meant to secure the accomplishment of the frequencies ascertained by observation: the top hat method and the random coefficient correlation method.

3.1. **The top hat method.** In order to illustrate the top hat method, we consider a simplified numerical example. Let us assume an event E occurs twice in three hours and five times in 4 hours. It follows that the ratio between the frequencies of the 3 hours and 4 hours intervals is 5 : 2. In order to reproduce through the top hat method this empirical distribution, we consider the cumulated frequency for the first and second interval respectively 2 and $2 + 5 = 7$. By generating random numbers from the set $N = \{1, 2, 3, 4, 5, 6, 7\}$, a ratio approximately equal to 5 : 2 can be secured, between the probability of event E_i to occur at an interval of 4 hours and the probability of event E_i to occur at an interval of 3 hours, if the following rule is observed:

— If $0 < N \leqslant 2$ the interval considered is of 3 hours

— If $2 < N \leqslant 7$ the interval considered is of 4 hours.

For the general case, we consider the frequencies of the event E_i:

$$f_{i1};\ f_{i2};\ \cdots\ f_{ip_i}\ .$$

The cumulated frequencies are then considered:

$$F_{i0} = O;\ \ldots\ F_{ij} = \sum_{l=1}^{l=j} f_{il};\ \ldots\ F_{ip_i} = \sum_{l=1}^{l=pi} f_{ip_i}$$

Random numbers $N \in \{1, 2, \ldots F_{ip_i}\}$ are generated. Then, the following rule is applied: If $F_{ij-1} < N \leqslant F_{ij}$ the interval θ_{ij} is taken.

The frequencies of the random activities durations are similarly computed:

$$\varnothing_{i0} = 0;\ \ldots\ \varnothing_{ij} = \sum_{l=1}^{l=i} \varphi_{il};\ \ldots\ \varnothing_{iq_i} = \sum_{l=1}^{l=qi} \varphi_{ij}$$

3.1.1. *General description of the algorithm*

In order to realize the simulation, we consider the work process evolving as follows:

The activities with constant durations of the cycle are performed. For each activity of the cycle, the occurence of any of the random events liable to be associated is tested. In the affirmative, we chose a random number with

a relevant duration which is recorded. All random events are similarly tested. In the negative, the duration of the subsequent constant cyclic activity is recorded and the testing is done over again. This testing should be carried out for a simulation period D standing for the summed up durations of all activities repeated with a certain frequence (ordinary 8 hours), which are the object of the study. After the period to be simulated is over, the computation comes to an end. The rates are summed up in agreement with the different time classes (by cyclic and non-cyclic activities).

3.1.2. *The logic scheme of the algorithm*

It results that the principal steps of the algorithm are the following:

1. At a moment T_r we test if $T_r \lesseqgtr D$. If $T_r > D$, we stop simulating and we proceed to step 5; on the opposite we proceed to step 2.

2. We examine the set of events $\{E_1, E_2, ..., E_m\}$. We consider an event E_i with the occurence frequence k up to the moment T_r. Last time the event E_i occured is $T_{ik}(T_{ik} < T_r)$. The time elapsed between this moment and the moment T_r is computed:

$$\Delta T_{ik} = T_r - T_{ik}$$

We look for an interval were ΔT_{ik} can be included. Let $\theta_{i0} + \left(j - \frac{1}{2}\right) \Delta\theta_i$ and $\theta_{i0} + \left(j + \frac{1}{2}\right) \Delta\theta_i$ be the interval satisfying this condition, that is:

$$\theta_{i0} + \left(j - \frac{1}{2}\right) \Delta\theta_i \leqslant \Delta T_{ik} \leqslant \theta_{i0} + \left(j + \frac{1}{2}\right) \Delta\theta_i \; j = 0, 1, \ldots f_i$$

It follows that a frequency f_{ij} corresponds to this interval. In order to achieve this frequency f_{ij}, we generate some random numbers comprised between O and F_{ip_i}, where $F_i = \sum_{h=1}^{h=pi} f_{ih_i}$. If the number drawn out is not comprised between F_{ij-1} and F_{il}, we try to draw another number i' out of the set of natural numbers $\{1, 2, ..., m\} - \{i\}$ and step (2) is resumed. The cycle is repeated as long as:

— all the numbers 1, 2,... m are exhausted without any random event occuring, and in this case we proceed to step 3;

or

— at an event whatever the random number drawn out satisfies the condition:

$$F_{ij-1} < N \leqslant F_{ij} \qquad N \in \{0, 1, \ldots F_{ip_i}\}$$

and then we proceed to step 4.

3. We add to the duration T_r the duration $T_{\nu+1}$ of the cyclic activity of rank $\nu + 1$ (the activity $A\nu$ being the last activity carried out up to the moment T_r). The new actualized moment $T_{\nu+1}$ is:

$$T_{r+1} = T_r + t_{\nu+1}$$

We proceed to step 1.

4. We draw a random number N' out of the set of natural numbers 1, 2, ... $\emptyset_{i_{qi}}$. We set down two succesive cumulated frequencies between which we can place the random number N, that is:

$$\emptyset_{ij-1} < N' \leqslant \emptyset_{ij} \qquad N' \in \{0, 1, 2, ..., \emptyset_{i_{qi}}\}$$

The duration of the random activity A'_r is $\tau_{io} + j\Delta\tau_i$

The new actualized moment T'_{r+1}:

$$T'_{r+1} = T_r + \tau_{io} + j\Delta\tau_i$$

We proceed to step 1.

5. We carry out different computations, as for example: total durations of the same type activities, adequate weights etc. Fig. 3 shows the logic scheme of the work process simulation algorithm.

3.2. *The random coefficient correlation method*

This method is applied if we can establish mathematical relations expressing a continuous dependence between the parameters belonging to the considered phenomena.

For instance, we can find out a function expressing the distribution law of the frequencies for the different intervals θ_{ij}. Considering the inverse function, there are procedures for generating intervals with given distribution, on the basis of uniformly distributed random numbers.

After having obtained the duration θ_{ij} through the above mentioned procedure, the problem arises of establishing the duration of the random activity τ_i. To that end, we assume an exponnential relation with the form:

$$\tau_i = C\,\theta_{ij}^{\alpha}\,\bar{\varepsilon}$$

where: $\bar{\varepsilon} = 1 + \beta \dfrac{\sigma_i}{\theta_i} x^{\gamma}$

x = a random variable, uniformly distributed, belonging to a finite number of equidistant values comprised in the interval [0, +1)

C and α = constants

β = random variable having the values + 1 or −1

σ_i = the average square deviaton of the durations θ_{ij}

θ_i = the average of the durations θ_{ij}

γ = constant integer

This correlations secures, by means of the random coefficient $\bar{\varepsilon}$, a simetric distribution of the values τ_i and a higher frequence around the average. The higher values the exponent has, the nearer the values distribution τ_i is to the average.

In order to apply this correlation, only steps 2 and 4 of the algorithm are modified.

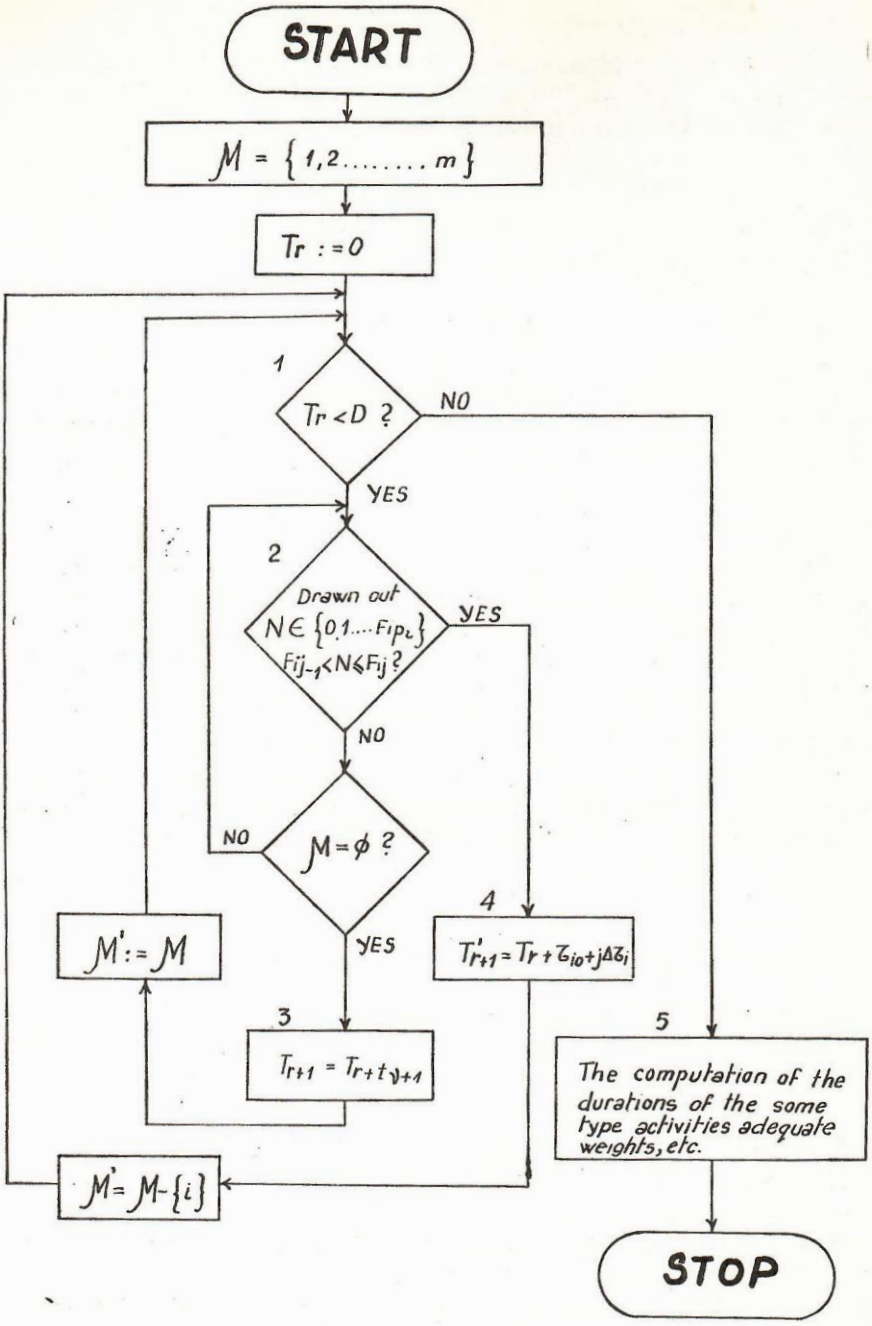

Fig. 4. The logic scheme of the work process simulation algorithm

4. PRACTICAL APPLICATIONS

In order to illustrate the possibility of practical application of the work process simulation, a simplified example from the area of building industry was chosen. The work process selected was parquet assembling.

This proved to be a rather representative work process from the standpoint of the theoretical model. The cyclic activity of this process is characterized by a high frequency of certain movements. The whole work process was analyzed, selecting for the study activities related to the parquet assembling on the broad of the floor, which prevail; the influence of the other activities was to be found and added depending on the shape and size of the room. Thus, the analyzed formal cyclic activities were:

— choice and seizing of the fillets;
— location of the fillets;
— keying of the fillets;
— seizing of the nails;
— nail hammering.

In order to find out the durations of these elements, the MTM system was used, and a total of 2,959 sec/sq. metre resulted.

The random events and the frequence of their occurence have also been found. On the basis of statistical research, it was found that the main random factors are:

1. Inobservance of the number of nails hammered into a fillet as against the standard (more or less nails)
2. Inobservance of the number hammerings when keying the fillets, as against the MTM analysis of the prescribed work process
3. Idem, when hammering the nails
4. Nail bending during the hammering
5. Appearance of faulty fillets
6. Need of manufacturing some special fillets
7. Work rate variation
8. Deterioration of working tools
9. Breaks for rest and natural necessities.

Frequency matrices were drawn up for each of these factors (like in Table 1).

Subsequently, the simulation algorithm through the top hat method was applied, using a NEAC-1240 computer. There were 25 simulations carried out, and part of the results were entered in Table 2, using as common time measuring unit the sec/sq. meter.

In computing the durations of the cyclic formal activities, we assumed for some of the activities standard conditions. For instance, for activity "Nail hammering", we considered a constant number of nails being hammered into a fillet, according to the execution standard. In practice, there are positive or negative deviations as against this number. In the considered case, as shown in Table 2, the result of this deviation for a sq. meter is negative. The random activity "Work rate variation" has also positive or negative durations as a result of the fact that, in practice, the workers perform their acti-

vity at a higher or lower rate than the optimum rate, according to; the specific chacracter of the activity, psycho-physiologic condition of the worker, etc, the predetermined time norms being set at an optimum rate.

Table 2

Results of the simulation of random factors occuring with parquet assembling (through the top hat method)

Item of activity	Simulation			
	I	II	III	IV ····· XXV
1	−216	−216	−208	−214 ..... −208
2	9	10	9	8 16
3	12	10	10	10 14
4	140	105	120	125 95
5	14	14	18	10 15
6	480	700	0	0 500
7	−105	0	−200	150 ..... −200
8	52	0	60	0 80
9	180	200	310	120 390
Total random activities	566	823	119	209 702
Formal cyclic activities	2959	2959	2959	2959 2959
General total	3525	3782	3078	3168 3661

We notice that the total duration of the random activities varies between 119 sec/sq. meter and 823 sec/sq. meter, the constancy coefficient being thus:

$$C_s = \frac{823}{119} = 7$$

It follows that the variation of the perturbing factors is considerable consequently the precision is low. If we take into account the influence of this variation over the whole process, we obtain a lesser stability coefficient, that is:

$$C_s = \frac{3782}{3078} = 1.23$$

This stability coefficient is generally satisfactory for manual processes.

On the basis of these results, we can predict that the variation of the mean index of standard observance to be introduced is $\pm$ 11.5%. In certain cases, this variation is satisfactory. If the objective of standards policy is a most perfect balancing of workers'efforts, this percentage can be modified through adequate measures with respect to the random factors.

In order to check the validity of the computation, the results of simulation were compared to data from 10 building sites. A number of work quota fulfilment indexes was produced through simulation, with the following characteristics:

— average work quota fulfilment index	1.04
— stability coefficient	1.13/0.92 = 1.22
— standard deviation	$\pm$ 0.035
— significance level	0.05

Applying the square χ^2 test to the row of computed indexes as compared to the monotonous row 1.04, ... 1.04, it was found that these two rows do not differ significantly (considering a significance level of 5%).

The given example has made it obvious that simulation can be used to substantiate stability coefficients or other characteristics of work processes.

5. CONCLUSIONS

By simulating the work process, we obtain an amount of information that cannot be obtained through the classical methods of work consumption ascertainment, or that is estimated without a theoretical substantiation.

This method is meant to complete the results obtained by introducing predetermined time in establishing work time consumption, by taking into account the characteristics of human work that could not be pointed out through these methods.

On the other hand, by considering a rate distribution instead of a unique rate, through simulation we obtain a model reproducing more exactly the reality, alowing to consider the particularities of the work processes and of the workers.

The method of simulation is part of the general tendency towards simplifying the work measurement methods.

The application presented is referring to the first stage, in which the optimization of the work process was not aimed at. A long-term stage of simulation applications is the generating of possible work fulfilment strategies, to which an efficiency function should be attached, allowing us to choose the optimum variant.

Although the application of simulation seems at first unusual, it will open new simplifying prospects in the work study, it will allow, through deep analyses, the improvement and extension of the work measurement area.

REFERENCES

1. CHURCHMAN C.W.: *An analysis of the concept of simulation.* Symposium of simulation models. S.W. Publishing Co, Cincinnati, 1963.
2. NAYLOR Th. H., BALINTHY, J.I. etc. *Computer simulation techniques.* John Wiley & Sons N.Y., 1966.
3. CHORAFAS D.N.: *La simulation mathématique et ses applications.* Dunod, Paris, 1966.
4. TOCHER A.: *The art of simulation.* Princeton, D. Van Nostrand Co, 1963.
5. SCHAFER W.: *Rechentechnische Simulation des Baumaschineneinsatzes zur Berücksichtigung zufallsabhängiger Störeinflüss.* Bauzeitung No. 8/1968, Berlin, pp. 393—396.
6. KRESS H., GLONN: *Untersuchung zur Bestimmung der optimalen Organisation von Instandhaltungearbeiten an Fertigmaschinen bei werkstättenfertigung anhand eines Simulationsmodels.* Unternehmungsforschung Vol. 12, Heft 4.
7. TOWNE D.: *Computerized Work Factor.* Work study and management services. Vol. 13, No. 1/1969, pp. 15—20.
8. MADGE D.M.: *Simulation of truck movements in an open pit mining operation.* Canadian Operational Research Society, 1964.
9. HUDSON W.R.: *A study of the dynamic response characteristics of a reaction force operation for meaning physiological cost of dynamic manual work.* The Journal of Industrial Engineering, 1962.
10. LESKI, J.S.: *On time structure in Monte Carlo simulation.* Operational Quarterly, 1965.
11. TOELLINER J.D. etc.: *Simulation of a U.S. Navy Public Work. Organization.* Operations Research, 1966.
12. ROGERS J.C. : *Simulation of shalter systems in a contaminal environment.* Operations Research 1966.
13. MONTMOLLIN M.: *Les systèmes homme-calculateur. Contribution de l'ergonomie aux problèmes de l'intelligence artificielle.* A paper submitted to the Conference on the systhesis and analysis of manmachine system. Varna, 17—21, June, 1968.
14. NADLER G.: *Work Design.* Richard D. Irwin, Inc. Home Woord, Illinois, 1963. Richard D. Irwin, 1963.
15. SCHMIDT N.R., MEYERS W.E.: *Electronic Business Data Processing.* Holt, Reinhardt and Winston-NY-Chicago-S. Fr. -Toronto, London, 1964.
16. TERNIERE C.: *Etude physiologique des postes de travail par les mesures de la fréquence cardiaque.* Cahier de notes documentaires. Sécurité et hygiène du travail No. 54/1969.
17. BOJOREK E.: *Some details of work carried out in Poland.* Machinery and production engineering, 1968.

SIMULATION NUMERIQUE DES PROCESSUS DE TRAVAIL

Après avoir présenter les principales étapes de simulation, les auteurs donne la description d'une technique de simulation mathématique d'un processus de travail ayant des activités cycliques à durées constantes, troublées par des événements aléatoires diverses à durées variables. La suite de l'article contient les résultats obtenus dans le processus simulé pour l'industrie des constructions à l'aide d'un calculateur moyen. Les résultats obtenus donnent la possibilité de prendre des décisions en vue de l'amélioration des processus de travail existants.

Les avantages de la simulation du processus de travail sont en fait de vraies conclusions. La simulation complète les résultats obtenus par l'introduction des données standards pour

préciser la consommation de temps. Aussi on peut utiliser un bon nombre des résultats, obtenus pendant le temps de chronométrage de la vitesse de travail, pour un grand nombre de simulations de telle manière qu'on remarque la réduction de la quantité de temps.

De cette façon, la simulation ouvre de nouvelles voies de simplification de l'étude du travail et rend plus profonde l'analyse des différentes activités.

РУЧНОЕ СИМУЛИРОВАНИЕ ПРОЦЕССОВ ТРУДА

После указания важнейших этапов симулирования авторы описывают технику математического симулирования процесса труда с цикличной деятельностью постоянной длительности, нарушаемой различными случайными событиями переменной длительности. Далее они указывают результаты, полученные в симулированном процессе в строительной промышленности при помощи калькулятора средней величины. На основе этих результатов можно принимать решения в целях улучшения существующих процессов труда.

В качестве заключения выявляются преимущества симулирования процесса труда. Симулирование дополняет получаемые результаты путем ввода стандартных данных для уточнения расхода времени. Некоторые результаты, полученные во время хронометрирования скорости труда, могут также быть использованы для большого числа симулирований, причем отмечается сокращение количества времени.

Таким образом, симулирование открывает новые перспективы для упрощения изучения труда и обеспечивает более глубокий анализ различных видов деятельности.