**PAUL DIMO, engineer,
corresponding member
of the Academy of the S.R.R.**

Researcher – Digital Computer Dialogue in Electric Power System Problems

The aim of this paper is to find means of restoring the relation between direct and intuitive human reasoning and the respective physical phenomena in the conditions in which electronic computers are used in the domain of electric power system research.

1. PROSPECTIVE EVOLUTIONS IN THE RESEARCHER—DIGITAL COMPUTER RELATIONS

When the digital computer appeared many authors noticed the danger of losing the possibility for direct and intuitive reasoning on physical phenomena.

1.1. The profuse computing possibilities of digital computers have broadly expanded the domains in which research can be carried out. Concomitantly, they have limited, if not actually annihilated direct reasoning on structures and on the respective physical states.

Matricial calculus [15] and, particularly, the recent theories of flow graphs [14] have, nevertheless, marked a beginning in the forming of new-type new figurative concepts including multiple elements in synthetic representative units. Thus, certain matrices are representative for certain physical magnitudes of the system, certain graphs and particularly "residual" graphs may, by means of simple geometric figures, be representative for a state of dependency among certain physical magnitudes, etc.

1.2. In the domain of electric power system networks, although those networks exhibit simplifying characters (neuter common node, "so-called" linear network, generators and loads invariantly placed laterally with an end in the neuter common node), no proper characteristic evolutions have been recorded, able to lead to the maintenance of the simple figurative concepts used in the past (geometric figures made up of phasors, etc.) taking advantage of the use of computers. It may be said that general procedures (matrices, graphs) have also penetrated into this domain concomitantly with the use of computers, but here also, accompanied by the loss of the classical "figurative concepts" that showed physical phenomena simply and clearly and established intuitively a dependency between certain magnitudes [16].

1.3. Therefore, the *researcher-digital computer dialogue*, too, is still laborious at present, since study requires the examination of a table comprising numerous numbers or at least of variation diagrams of magnitudes that can be given directly by the computer and nothing more; geometrical figures, representative by the aspect and character of certain physical states are no longer used nowadays. Such geometrical figures constituting figurative concepts could make the dialogue easier since they would permit the further orientation of research and computation or the selection of solutions in research through the simple examination of representative geometrical drawing. Hereunder we will show new possibilities in this domain by employing the 2 figurative concepts of the Romanian methods called "Nodal Analysis", this name showing the fact that the study is undertaken by network node, the physical states through which the nodes of the system pass being considered in the research. We remind the 2 figurative concepts of nodal analysis:

1.3.1. *Radial scheme (REI)* having the node studied as centre, a typical scheme to which any system is reduced, whatever its actual complexity and structure are;

1.3.2. *Typical nodal image*, constituted by means of the three-phase short-circuit currents, symmetric in the node study, broken up by supply sources.

2. NODAL ANALYSIS AND ITS FIGURATIVE CONCEPTS

2.1. There results from the author's works [1] that by using the procedure of "Nodal Analysis" on the *REI* equivalent scheme, simple and standardized figurative concepts can be reintroduced in the study of electric power networks, in parallel with the usual computations carried out, for various problems, by means of computers. To this end "Nodal Analysis" uses the following methods:

2.2. *Topologic method.* This consists in synthetizing a Radial, Equivalent and Independent *(REI)* scheme, for the network node studied. The scheme is radial, equivalent to the rest of the network from the standpoint of the node considered and independent from the rest of the system, provided real voltages of the corresponding nodes retained for study in the reduced scheme be applied to the ends of the radial branches.

The *REI* scheme for a certain node is extracted from a complete equivalent scheme of the system considered, called the "Equivalent *REI* of the system" [8].

The equivalent *REI* of the whole system can be made up in various hypotheses, to serve the aims of the research:

— *final equivalent*, which only maintains the generator nodes;

— *system equivalent for a given node* which retains all the generator nodes plus one given node;

— *single load equivalent* which retains the generator loads plus one that is equivalent to the sum of all the real nodes with loads that have been eliminated;

— *system equivalent with a fictitious node*, formed by replacing a certain number of nodes by a fictitious equivalent node, etc.

2.3. *The method of "nodal images"* consists in making up *a typical graphical representation* of the effective short-circuit currents in the central node of the *REI* scheme, with their separation by sources (generator or plant represented by a synchronous generator).

In the nodal image every electrical machine appears in the respective node represented by a vector (YE) corresponding to the contribution of that machine to the symmetrical tri-phase shortc-ircuit current in the node. The "nodal image" is formed, containing vectors of the YE type (Y = admittance, E = voltage). They vary concomitantly with the variation of E (generating voltage) or with the variation of Y (which correspond to the variation of the network structure. The totality of the physical phenomena within a power network may be "seen" from a given node by watching the variation of its nodal image, i.e. the variation of the YE vector chain [1], [4], [6], [10].

2.4. *The method of mathematical modelling* consists in expressing the nodal equations of current injections in the nodes as a function of their potential, in view of programming the solution of the computation by means of a digital computer ($[I] = [Y] \cdot [E]$.)

Matricial calculus is used to this end, to obtain an orderly representation of the input data. The matrix [Y] of the real admittances of the network is initially made up.

By transforming this matrix the schemes and *REI* system equivalence can be deduced [1—9]. The computations are the current ones in the technique of numerical computation for electric power systems.

For the present case the nodal equations are used exclusively, the complete results necessary for the respective problem (currents, voltages, power, variations of the various magnitudes, losses, etc.) always being obtained in the usual form, in addition, with a supplement of computation and memory one also obtains all the data necessary for the *REI* schemes and nodal images equired in view of using the new standardized figurative concepts.

The transformation of matrix [Y] to reduce the nodes is made on basis of the Gauss elimination algorithm, the magnitude to be eliminated having first been "linearized". Simple mathematical procedures are used to transform the matrix in view of introducing equivalent nodes or fictitious nodes for special studies [1], [5], [6], [7], [8].

*

2.4.1. The one to one correspondence between the transformed "nodal" equations and the equivalent systems is permanently used and constitutes the fundamental feature in the procedures of nodal analysis. Identification of the coefficients of the admittance matrix [Y] allows geometric tracing of the network or if the equivalent network (the non-diagonal terms represent admittances between nodes and the diagonal ones the sum of the admittances around the respective node, with reversed sign.) The scheme can thus be reduced either directly, the equivalent reduced scheme being established by succesive transformations, or by reducing the equations and finally establishing the resulting scheme by identification of the terms.

3. IDENTITY OF GENERAL CONCEPTS WITH THE (ROBICHAUD) N — TYPE FLOW GRAPHS FOR THE STUDY OF ELECTRIC NETWORKS

It can easily be seen that all the *REI*-type, or "System Equivalent" type equivalent network, could also be considered as bi-directional N-type residual graphs, likewise one to one correspondence with the (N) type formal equations suggested by L. Robichaud and having the node voltages as isolated variables [14]. Such residual graphs can also be obtained by the method of the classical reduction of the flow graphs by introducing the "normalizing factor" in the equation and by de-normalizing the graph in the end, in the manner recommended by the author in view of obtaining the network with its real admittances instead of the normalized transmittances.

4. CONTRIBUTION OF THE TWO FIGURATIVE CONCEPTS IN RE-INTRODUCING DIRECT ESTIMATION OF THE PHYSICAL SITUATION

4.1. Once obtained, the *REI* schemes furnish indications on the structural qualities of the system as it appears seen from the respective node.

In such radial schemes a first transformation and simplification will be made by suppressing the branches with small admittances (or by concentrating them into a single equivalent branch), branches which represent equivalent connections to nodes with "applied" voltages, generally distant from the "node under study" and which practically bear no influence on this node. Thus, the *REI* scheme obtained from the computer will establish the *limited* number of "generator" nodes with applied tensions to be maintained in the radial equivalent scheme made up for the study of a given node; limitation of the number of branches results in a fundamental simplification, reducing the system, vast though it be, to a simple radial system with a small number of nodal branches. For this scheme one makes out the "nodal image" which constitutes the second figurative concept.

4.2. The "nodal images" are a representation of the superposition of the effects in a node, for a given regime, and it shows further the physical phenomena in the respective system as well as its effects on the node under study for which the *REI* schemes and the image have been made up. Such equivalent elementary scheme and their corresponding nodal images then allow, by a simple inspection of the schemes and images, to study all the fundamental problems such as: characteristics of respective regimes and regulating problems [6], static [2] and dynamic [4,7] stability, protection problems [6], losses [8], optimization of structure [1,8], etc. These schemes reduced to the essential and certain standardized images allow for an immediate orientation in determining the nature of the phenomena, their causes and the respective physical conditions.

5. PERIPHERIC DEVICES THAT CAN BE ADDED TO THE COMPUTER IN VIEW OF OBTAINING DIRECTLY THE TWO FIGURATIVE CONCEPTS

5.1. In view of simplifying the analysis of the behaviour of the electric power system, by means of the nodal images in the manner briefly shown above, a mechanical apparatus is known [10] called the "graphic

analyzer", composed of several mobile rulers and patented in this country and abroad.

The use of this apparatus has the disadvantage that its handling is awkward when the system is complex and vast (with multiple generators), its manoeuvering is slow and not automatized; the data required for its manoeuvering must first be obtained from the computer or from a computation made by any other method, by typewriting, and their transposing on the graphic analyzer is unwieldy. Therefore, this procedure is often used by the simple making up of the diagrams.

5.2. In view of avoiding these disadvantages and particularly in view of extending the possibilities of analysis, an installation has been lately suggested [10] for the complete automatic analysis of the behaviour of electric power systems by "nodal images". It comprises:

5.2.1. A computer with a collection of specific sub-programmes in external memory.

5.2.2. Installations enabling its coupling to telephone lines in view of transmitting the numerical data.

5.2.3. A system for visualizing the nodal images and respective radial schemes. The visualizing system is composed of a device for reading the data computed by the computer, a control system of the visualizing device itself (which may be an oscilloscope, an XY recorder, TV-set etc.), as well as a system for photographing the nodal image concomitantly with the recording of the data correspinding to the image photographed.

5.3. Figures 1—6 show a few aspects of the installation and of the manner in which it works.

5.4. According to the suggestion the block diagram of the installation (Fig. 1) is composed of a computer 1 in which the data are introduced either in the usual manner by the operator, or by coupling it to a telephone line used for transmitting the numerical data through an adaptor device 2, in such a manner that some data can even be transmitted directly from the power system.

5.5. According to the programme set by the operator, the computer will compute, together with the computation necessary in the respective

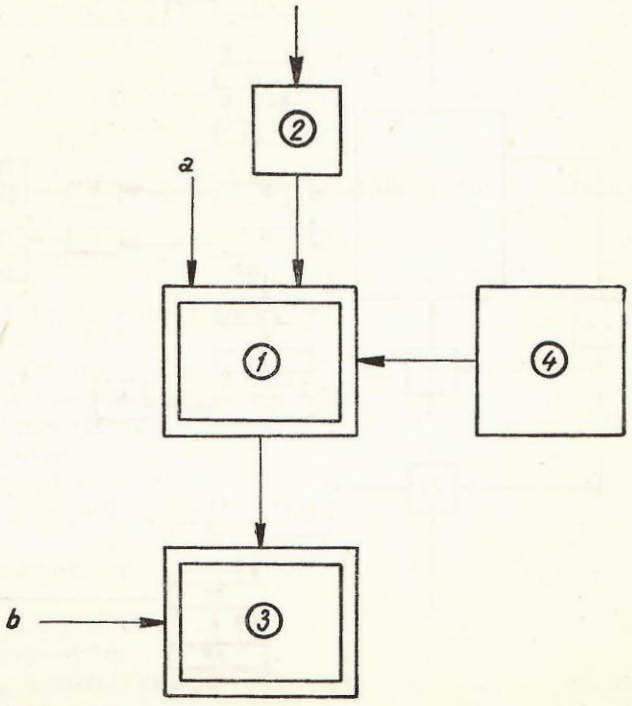

Fig. 1. Block diagram of the installation

problem, also the data required for the *REI* equivalence and for their representation in nodal images (currents YE and YU, [1, 2, 4]) and will transmit these data to the visualizing system 3.

6. THE COLLECTION OF PROGRAMMES CORRESPONDING TO THE COMPLEX PROBLEMS OF THE ELECTRIC POWER SYSTEM

The collection of specific sub-programmes required for the computation is kept in the external memory 4 of the computer and is made up of various sub-programmes that can be combined with one another, such as:

— Computation of regimes and power circulation in various variants using the matrix [Y] or some of its transformations, e.g. the method called "short-circuit current iteration" [5];

— Elimination of nodes not retained in the final *REI* schemes (Gauss algorithm);

— Computation of short-circuit currents in the various nodes study and computation of the contribution of each generator to the short-circuit current;

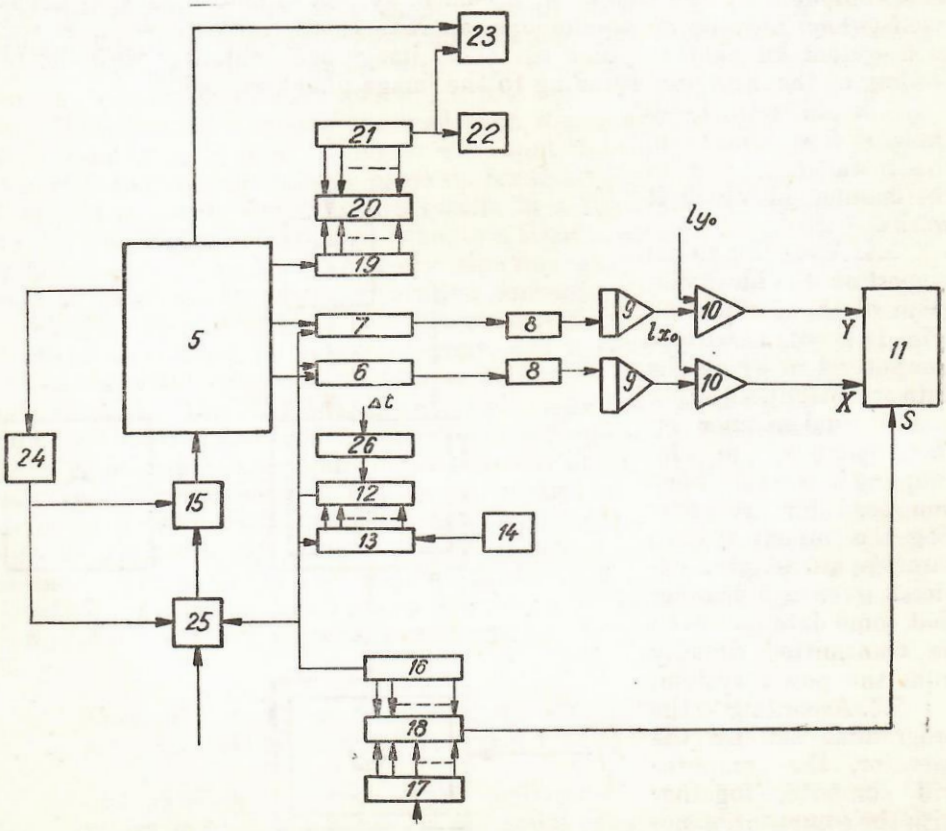

Fig. 2. Block diagram of the visualizing device

— Forming the *REI* equivalents of certain types, as for example (1) final *REI* equivalent, with elimination of all loads, (2) *REI* equivalent with generating nodes plus a load node, (3) *REI* equivalent with unique load, etc.

— Making up *REI* equivalent schemes and respective nodal images for the (real or fictitious) nodes studied, using the data obtained from the computations effected by sub-programmes like the above and retaining in the nodes studies only the magnitudes that really influence the respective nodes;

— Computations of dynamic stability with parallel determination of the *REI* schemes and of the nodal images for the nodes in which it is required to observe the evolution of the phenomena (through which the system is visualized);

— Computation of static stability in nodes selected by the operator, with the introduction of the magnitudes that are characteristic for these phenomena (synchronous reactances of generators or reactions equivalent to a voltage regulation, etc.);

— Computation of losses by means of the formula with B constant coefficients and computation of the B coefficients, found in various hypotheses of generator loading, for single load equivalents [8].

— Nodal image of the fictitious single load node for the regimes computed above.

— Computation of plant optimum loading with extraction of the *REI* scheme for the single load node and its nodal image.

— Determination of the "parasite" circulations which appear in the windings of the single load system *REI* equivalent for studied regarding the optimization of the structure, etc.

7. INDICATIONS ON THE AUTOMATIC COMPUTING INSTALLATION SUGGESTED

7.1. The visualizing system in Fig. 2 (block diagram of the visualizing device) is composed of:

5	— auxiliary memory
6, 7	— registers
8	— analog to digital converters
9	— integrators
10	— summing devices
11	— visualizing (oscilloscope) or recording device
12, 20	— digital comparators
13, 19	— pulse counters
14	— pulse generator
15	— memory (reading) control system
16, 17	— counters
18	— digital comparator
26, 21	— registers
22	— photographing device
23	— electric typewriter
24	— re-cycling control circuits
25	— gate circuit

The computer records in the auxiliary memory the data obtained consequently to the computation made. These data are necessary for making up the nodal image (*Ix* and *Iy* components of the shortcircuit current in the node considered, furnished by each generator at various moments).

7.2. The memory control system selects the first pair of values (abscissa and ordinate of the first vector) and transfers them to registers 6 (abscissa) and 7 (ordinate).

By means of the analog to digital converter, of the integrator and of the amplifier, the numbers registers 6 and 7 are converted in linear voltages variable in time, their ascending slope being proportional with tha value of the number *. These voltages control the horizontal and vertical displacement of the oscilloscope spot.

7.3. The slope of the straight line is changed — an image like that in Fig. 3, which corresponds to a chain of 6 vectors being thus obtained — at the moment when comparator 12 generates a pulse, since this pulse controls (through gate 25) the reading of the following pairs of values and their transfer to the registers 6 and 7 (after previous cancelling of the former contents). Comparator 12 together with register 26, counter 13 and (stabilized frequency) pulse generator 14 actually make up a time-number converter, since the time interval during which the comparator generates no pulse is directly proportional with the number in register 26 and with the pulse period.

7.4. The remaining devices actually constitute ancillary systems necessary either for re-cycling the reading (provided the image on the oscilloscope screen be steady) or for synchronizing the time basis (16, 17, 18) so that the spot should return to its initial state when the vector chain (made up of a number of vectors known to the operator and which can be pre-determined) has been exhausted, or for the photographic assembly (19, 20, 21, 22, 23) and they only complete the installation in view of assuring maximum efficiency to the man-machine dialogue.

The organic conception of the installation has been suggested by engineer Petre Dimo of the Bucharest Polytechnical Institute.

The installation has the following advantages: by means of the installation described the operator can control by programming the transfer of the data computed by the computer, from the latter's memory to that of the visualizing system, for any of the nodes, in view of obtaining the respective nodal image. The elements of the corresponding *REI* type scheme or of the

---

* At the register output the numbers n_x and n_y appear, which represent the values of I_x and I_y. The analog to digital converters generate the voltages:

$$u'_x = k_1 n_x$$

$$u'_y = k_1 n_y$$

and the integrators:

$$u_x = k_2 \int_0^{\Delta t} u'_x \, dt = k_2 u'_x \Delta t = k_1 k_2 n_x \Delta t = k n_x$$

$$u_y = k_1 k_2 n_y \Delta t = k n_y$$

The time interval Δt is chosen by the operator as a function of the number of vectors, in view of obtaining an image of convenient size on the screen.

REI equivalent of various types, of the system (found consequent to calculation) are kept in the computer.

7.5. It is thus possible to obtain, automatically and permanently, the nodal image of any real or fictitious node under study, an image which is very difficult to obtain by means of the graphic analyzer in the invention mentioned [10], likewise, the Hodification of the nodal image consequently to an event whatever in the system is immediately obtained, a fact which allows the simple observations of the effect and the further division of the study (dialogue).

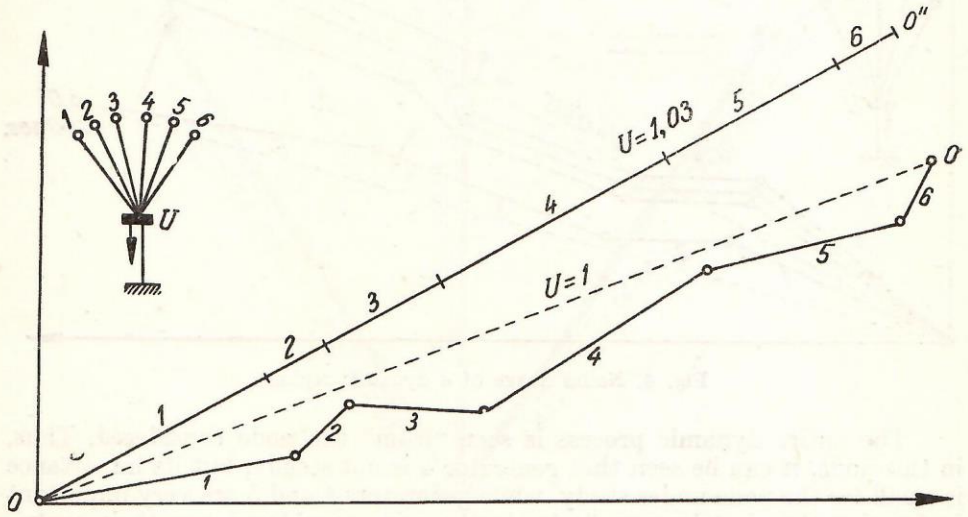

Fig. 3. Nodal image. The change of power distribution on generators raises the temperature by 20% in the represented node

8. ORGANIZATION OF THE MAN-DIGITAL COMPUTER DIALOGUE

Fig. 3 shows an example of "nodal image" obtained automatically for a node in the particular case of 6 "generators" retained in the equivalence. The relative importance of each of the retained "generators" can be seen by the contribution of the respective vector YE to the total short-circuit current (YE) formed of the sum of all the vectors. The further analysis of the nodal image, in case the necessity for a more profound study arises, allows rich information to be obtained on the possible performances of a certain regime for the respective node. For example, the figure shows the maximum effect on the over-voltage of the node studied, in case the rotors of the 6 "generators" are dynamized. The maximum possible voltage in the node studied corresponds to the case where the vectors YE representing the generators seen from the respective node, are colinearized. This is for the case of example 1,15 (with 1 voltage from the initial image). The effect of a change in angle for each of the machines can be deduced by the simple rotation of the respective vector on the graphic analyser or on a diagram, thus reproducing the respective nodal image. The digital computer will re-compute in detail the effect of any modification introduced by the researcher in view of obtaining a standardized image in certain cases.

Fig. 4 shows an example of "nodal image" that can be obtained successively in time, for a dynamic regime. Starting for instance from the initial state at the time 0 seconds of a node after a short-circuit at a point whatever of the network, the evolution of the nodal image is shown at the time 0.2 sec., 0.25 sec., 0.3 sec. until the short-circuit is eliminated at 0.3 sec. (four images).

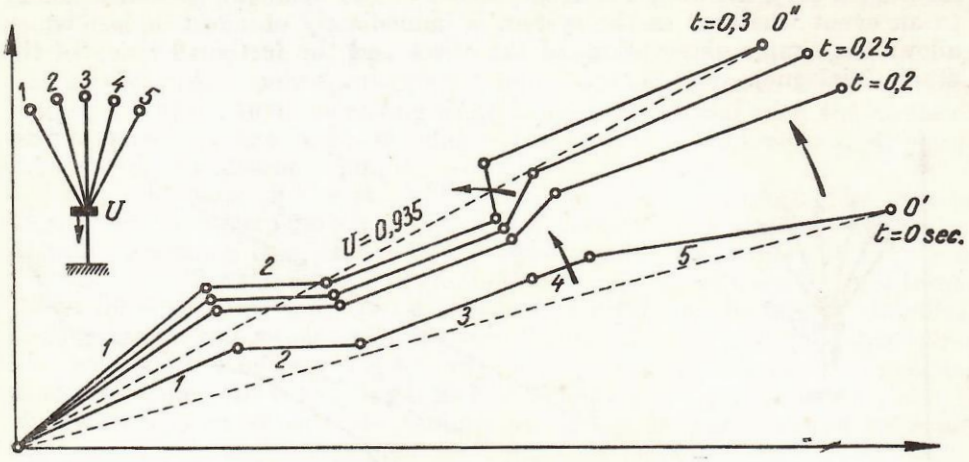

Fig. 4. Nodal image of a dynamic regime

The entire dynamic process is seen "from" the node considered. Thus, in this node, it can be seen that generator 4 is not steady, but its importance is small for the node under study, while generators 1 and 5 are very important in forming the electric magnitudes in the node considered (see their contribution to the total vector).

Such images can be obtained on the television screen, oscilloscope, XY recorder or otherwise, before, during and after elimination of the fault or after a change whatever in circuits. The operator can control the retainment of the desired image, only for the node he chooses, by photographing, together with the complete data referring to the respective regime, or by having them recorded by typewriter, if they are necessary for study.

Fig. 5 shows an example of a single load *REI* equivalent for a system reduced to 5 "generators". Power circulation in the branches of the equivalent are noted on the figures in units to the basic power 100 MVA.

There is a "parasite" circulation between nodes 1, 2, 3 which is of no use in the supply of the load.

Fig. 6 shows the "nodal image" of the fictitious node of the single load for the power system with 3 generators considered above. We notice that generator 1 (represented by vector I_c) is the furthest from the "single fictitious load" and it is probable that this generator is the cause of great energy losses; this is in contrast with generator *K*. Elaborate research on the structural physical features of the system can be undertaken successively by means of the researcher-computer dialogue, based on equivalents and images.

The image changes in various regimes or connecting hypotheses of the system will allow the operators to re-introduce simple reasoning and positive orientation. Reading of the exact magnitudes, if this is necessary for accurate

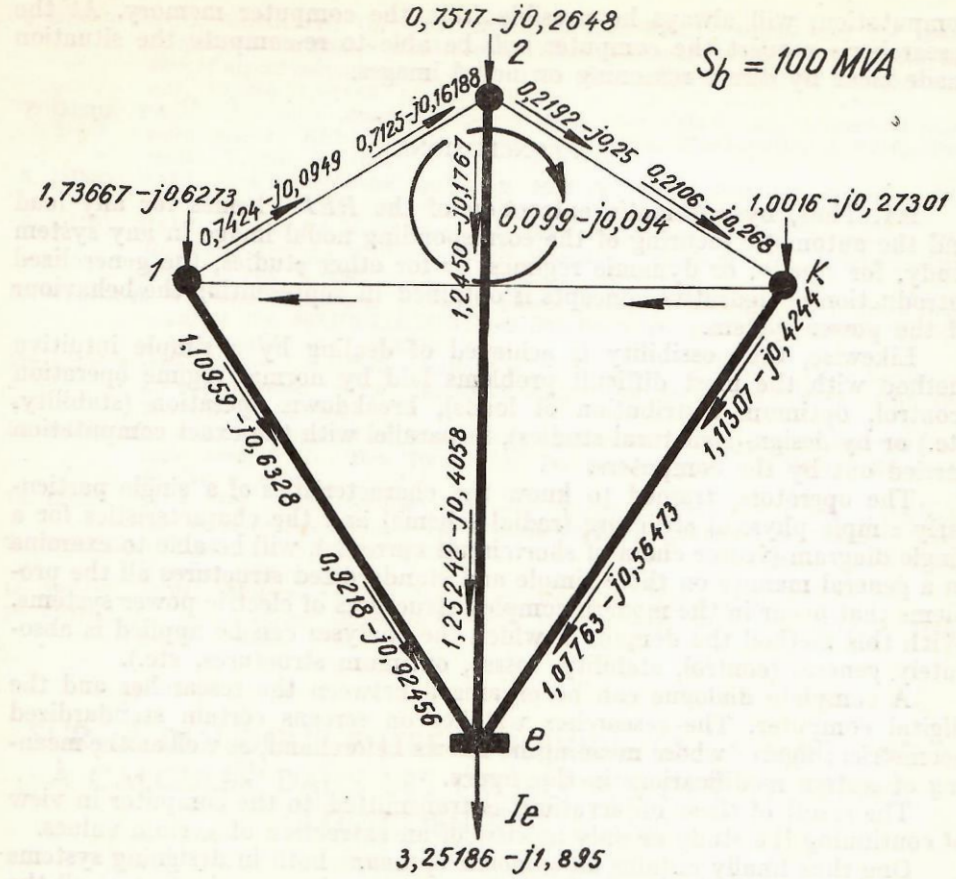

Fig. 5. The *REI* equivalent of a system reduced to a single load (its node)

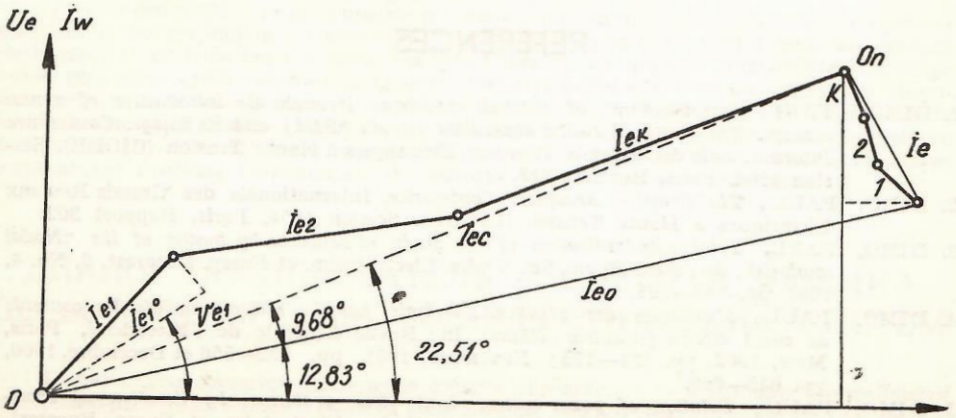

Fig. 6. The nodal image of node "e" in figure 5.

computation, will always be possible from the computer memory. At the researcher's request the computer will be able to re-compute the situation made clear by direct reasoning on nodal images.

9. CONCLUSIONS

9.1. Thus, by automatic extraction of the *REI* schemes for any load and the automatic securing of the corresponding nodal image in any system study, for steady, or dynamic regimes, or for other studies, the generalized introduction of figurative concepts is obtained in representing the behaviour of the power system.

Likewise, the possibility is achieved of dealing by a simple intuitive method with the most difficult problems laid by normal regime operation (control, optimum distribution of loads), breakdown operation (stability, etc.) or by design (structural studies), in parallel with the exact computation carried out by the computers.

The operators, trained to know the characteristics of a single particularly simple physical structure (radial scheme) and the characteristics for a single diagram (vector chain of shortcircuit currents), will be able to examine in a general manner on these simple and standardized structures all the problems that occur in the modern complex structures of electric power systems. With this method the domain in which the analyses can be applied is absolutely general (control, stability, losses, optimum structures, etc.).

A complete dialogue can be organized between the researcher and the digital computer. The researcher watches on screens certain standardized geometrical figures whose meaning he knows beforehand, as well as the meaning of certain modifications in the figure.

The result of these observations is transmitted to the computer in view of continuing the study or only in view of an extraction of certain values.

One thus finally obtains an *economic optimum* both in designing systems and in determining their operation, after an extensive examination of all the possible solutions, by a simple operative method, easily assimilated by specialized researchers.

REFERENCES

1. DIMO, PAUL, *Simplification of network problems through the introduction of a new concept. The standard radial equivalent circuit (REI) and its image.* Conference Internationale des Grands Réseaux Electriques à Haute Tension (CIGRE). Session 1964, Paris, Rapport 318.
2. DIMO, PAUL, *The Graphic Analyser.* Conférence Internationale des Grands Réseaux Electriques à Haute Tension (CIGRE). Session 1958, Paris, Rapport 302.
3. DIMO, PAUL, *Total standardization of the study of networks by means of the "Nodal analysis"*. In: Rev. Roum. Sci. Techn. Electrotechn. et Energ. Bucarest, 9, No. 4, 1964 pp. 385—591.
4. DIMO, PAUL, *L'analyses des réseaux d'énérgie par la méthode nodale des courents de court circuit (et autres études).* In: Revue Générale de l'Electricité, Paris, Mars, 1962, pp. 131—175; Novembre, 1961, pp. 532—556 et Decembre, 1960, pp. 645—666.
5. DIMO, PAUL, *Solution of power-system load flow problems by iteration of short-circuit currents.* In: Rev. Roum. Sci. Techn. Electrotehn. et Energ. Bucarest, 10, No. 3, 1965.

6 DIMO, PAUL, MORAITE, G., HŰCKERT, S., *The "REI" scheme and the nodal images obtained without calculation by determining the short circuit currents with the help of digital computers.* In: Rev. Roum. Techn. Electrotechn et Energ. Bucarest, 10, No. 1, 1965, pp. 115—127.
7. DIMO, PAUL, *Une seule structure physique type pour l'étude des réseaux — L'équivalent radial: REI.* In: Rev. Roum. Sci. Techn. Electrotechn. et Energ. Bucarest, 9, No. 1, 1964
8. DIMO, PAUL, *Les solutions des équivalents REI du réseau dans son ensemble.* In: Rev. Roum. Sci. Techn. Electrotechn. et. Energ., Bucarest, 9, No. 2, 1964.
9. DIMO, PAUL, *Using the Nodal Approach with short-circuit current Phasors for the Graphical Analysis of Power System Operating Consitions.* In: Elektrichestvo, Moskva, No. 8, 1962.
10. *Patents for the "graphic analyser"*: USA — patent No. 3, 116.558/7.01.1964; Great Brit. —patent No. 868815/3.06.1958; Rep. Soc. Romania—patent No. 43858/3.X.1960; France—patent No. 1208267.
11. *Author's certificate for "Installation destined to the automatic, analysis of the behaviour of an electric power system"* Authors: Paul Dimo and Petre Dimo. O.S.I. file 50537/29 April, 1966.
12. MORAITE, G., *The selection of the "Dangerous" dynamic States by means of the "DIMO" nodal analysis.* In: Rev. Roum. Sci. Techn. Electrotech. et Energ., Bucarest, 11, No. 2, 1966.
13. DIMO, PAUL, *Die Netzberechungen nach dem Knotenpunktverfahren durch Abbildung des Netzes in Strahlenform.* IX, International-Kolloqvium T. H. Ilmenau, 1964.
14. ROBICHAUD, L., BOISWERT ROBERT, *Les graphes de fluence,* Paris, Edit. Eyrolles, 1961.
15. WEISS, VON, *Matrix Analysis,* New-York, Ed. Van Nostrand, 1964.
16. HORE, R. A., *Advanced Studies in Electrical Power System Design.* Champan & Hall, London, 1966.

SUR LE DIALOGUE ENTRE L'INDIVIDU ET LA MACHINE À CALCULER DANS LES PROBLÈMES DES SYSTÈMES ÉLECTROÉNERGÉTIQUES

L'auteur de cet article se propose de trouver, dans les conditions de l'utilisation des machines électroniques à calculer dans le domaine des recherches sur les systèmes électroénergétiques, les moyens permettant de rétablir la relation entre le raisonnement humain, direct et intuitif, et les phénomènes physiques respectifs.

L'étude comprend: l'analyse modale et ses concepts figuratifs; l'identité entre les concepts généraux et les graphiques d'écoulement du type *N* (Robichaud), pour l'étude des réseaux électriques; la contribution des deux concepts figuratifs: le schéma radial (REI) et l'image nodale type dans la réintroduction de l'appréciation directe des situations physiques; les dispositifs périphériques qui peuvent être ajoutés à la machine à calculer pour l'obtention directe des deux concepts figuratifs; la bibliothèque de programmes afférents aux problèmes complexes du système électroénergétique; des indications sur une installation de calcul automatique proposée par l'auteur; l'organisation du dialogue individu-machine à calculer.

ДИАЛОГ ИССЛЕДОВАТЕЛЬ — СЧЕТНАЯ МАШИНА ПО ВОПРОСАМ ЭЛЕКТРОЭНЕРГЕТИЧЕСКИХ СИСТЕМ

Целью статьи является нахождение средств определения — в условиях употребления электронно-расчетных машин в области исследования электро-энергетических систем — связи непосредственно между человеческим рассудком и интуицией и соответствующими физическими явлениями.

Статья содержит модальный анализ и его фигурные наброски; сопоставление общих набросков с графами течений типа N (Робишо) для изучения электросетей; вклад двух фигуративных предпосылок — радиальной схемы (REI) и узлового типичного воображения — в введение непосредственных оценок физических положений; периферийные установки, которые можно добавить к количественной счетной машине для непосредственного получения этих двух фигурных предпосылок; программную библиотеку, соответствующую сложным вописам электроэнергетической системы; указания для предложенных автоматических расчетных установок; организацию цифрового дилалога человек-счетная машина.