V. MIERLEA

# An Algorithm for Scheduling *n* Works on *m* Machines with a Minimal Starting and Stopping Interoperational Time

*The operational research represents an useful instrument for optimum decision making action having a main class of elements: the algorithms of mathematical models.*

The scheduling problem for which this algorithm is given consists in finding the order of performance of $n$ works on $m$ machines so that the unemployment time of the machines (between the operations of the works) shall be minimal. The scheduling is carried out under the following conditions:

1. Each work is carried out through $m$ operations at most. All the works have the same flow sheet on the $m$ machines and there is no prescribed ordering relationship between them.

2. The operations for a certain work are scheduled in accordance with the production process.

3. A machine cannot be employed for two simultaneous operations.

We have the following notations:

$L^j$ is the work $j$, $(j = 1, 2, \ldots, n)$;

$m_i$ is the machine $i$, $(i = 1, 2, \ldots, m)$;

$0_i^j$ is the operation $i$ of work $j$;

$t_i^j$ is the work time required for performing operation $0_i^j$;

$t_i^j$ is computed, for instance, according to formula:

$$t_i^j = t_{i,p}^j + t_{i,op}^j + t_{i,a}^j + t_{i,o}^j + t_{i,t}^j \tag{1}$$

where: $t_{i,p}^j \geqslant 0$ is the preparatory and concluding time;

$t_{i,op}^j \geqslant 0$ is the operating time;

$t_{i,a}^j \geqslant 0$ is the attendance working time;

$t_{i,o}^j \geqslant 0$ is the resting time;

$t_{i,t}^j \geqslant 0$ is the time of breaks subject to technology.

It follows that $t_i^j = 0$ can exist, which means that there may be fictitious operations.

4. It is assumed that two or more successive operations for the same work can be partially or totally performed at the same time. For instance, if the details are worked out in manufacturing batches, the performance of operation $0_i^j$ for a certain detail begins as soon as operation $0_{i-1}^j$ has been carried out for a certian number of details in the batch. In other words, in order to start performing operation $0_i^j$ with a certain batch of a detail, it is required a minimal interoperational stock of details for which operation $0_{i-1}^j$ has been carried out. The time required for performing such a minimal interoperational stock is written: $a_i^j$ is the minimal interoperational starting time.

Because, in general, $t_{i-1}^j \neq t_i^j$ for the same batch of a given detail, in order to secure work continuity on $m_i$ machine, it is necessary to start performing operation $O_i^j$ such as the completion of the whole batch of details shall be carried out according to time $b_i^j$ which is the minimal interoperational stopping time.

In Fig. 1 and further in this paper, values $t_i^j$, $a_i^j$ $b_i^j$ are assumed for the whole batch of details. For instance, $t_i^j$ is the time required for performing operation $0_i^j$ with all the details in the given batch.

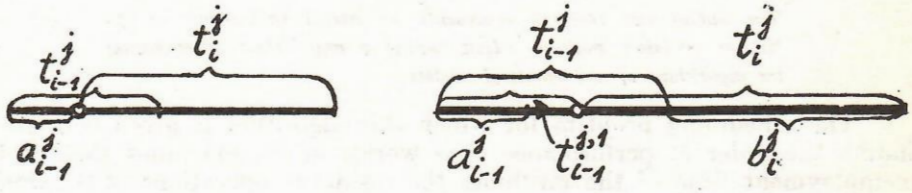


Fig. 1

In order to meet the two conditions — minimal interoperational starting and stopping time—, we ascertain $t_i^{j,1}$ and $t_i^{j,2}$ so that:

$$t_i^j = t_i^{j,1} + t_i^{j,2} \qquad 1 \leqslant j \leqslant n \tag{1'}$$

where:

$$t_i^{j,1} = a_i^j, \text{ if } t_{i+1}^j - b_{i+1}^j \geqslant t_i^j - a_i^j$$

and:

$$t_i^{j,2} = t_{i+1}^j - b_{i+1}^j, \text{ if } t_{i+1}^j - b_{i+1}^j < t_i^j - a_i^j$$

$t_i^{j,1}$ in (1') will be used instead of value $a_i^j$.

Writing:

$x_i^j \geqslant 0$ for the time unemployed by the machines for work $L^j$ between operations $O_{i-1}^{j,1}$ and $O_i^j$ if we assume $O_i^j = O_i^{j,1} + O_i^{j,2}$; $(i = 1, 2, ..., m; j = 1, 2, ..., n)$.

$y_{i-1}^j \geqslant 0$ for the time unemployed by machines $m_i$ between operations $O_i^{j-1}$ and $O_i^j$

and considering $\mathcal{P}$, the set of permutations of works $L^j$, $(j = 1, 2, \ldots, n)$ and $p \in \mathcal{P}$, we must find a permutation $p$ to which a value $M$ shall correspond, so that:

$$M = \min_{p \in \mathcal{P}} \sum_{i=2}^{m} \sum_{j=2}^{n} y_{i,p}^{j}. \tag{2}$$

Such a type of problem can be currently met with the operative programming of mass production in engineering, textile industry, road construction, etc.

Now we shall describe an algorithm through which it is possible to reach a solution verifying relationship (2), satisfactory for many practical problems with respect to the number of the necessary arithmetical operations.

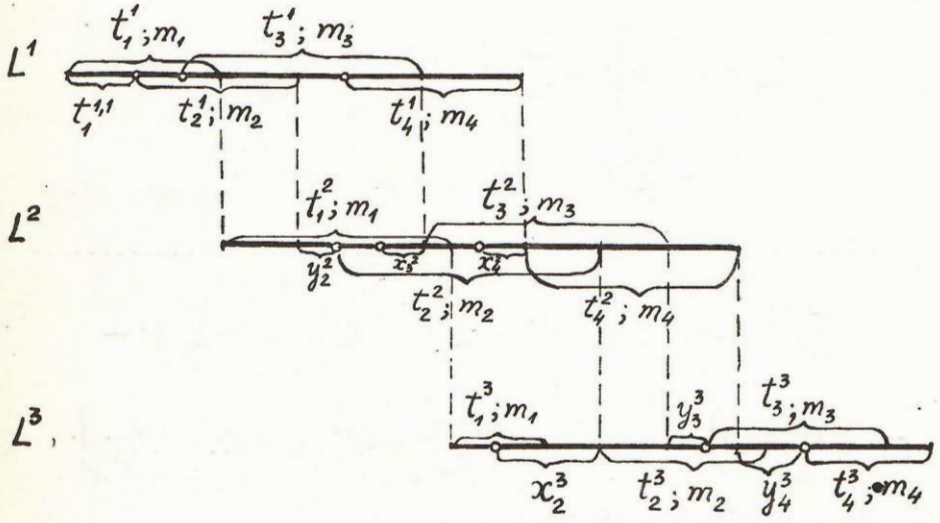


Fig. 2

We can see in Fig. 2 that for *a* $p \in \mathcal{P}$ there are relationships:

$$x_2^2 = max\ (t_2^1 - t_1^{1,2} - t_1^{2,1};\ 0) \tag{3}$$

$$\left.\begin{aligned} x_k^2 &= max\ \left(t_k^1 + \sum_{i=2}^{k-1} t_i^{1,1} - \sum_{i=1}^{k-1} t_i^{2,1} - t_1^{1,2} - \sum_{i=2}^{k-1} x_i^2;\ 0\right);\ k = 3, \ldots, m \\ x_2^3 &= max\ (t_2^2 + x_2^2 - t_1^{2,2} - t_1^{3,1};\ 0) \\ x_k^2 &= max\left[t_k^2 + \sum_{i=2}^{k-1} t_i^{2,1} + \sum_{i=2}^{k} x_i^2 - \left(t_1^{2,2} + \sum_{i=1}^{k-1} t_i^{3,1} + \sum_{i=2}^{k-1} x_i^3\right);\ 0\right] \\ & \qquad k = 3, \ldots, m. \end{aligned}\right\} \tag{4}$$

.....

$$x_2^j = max\ (t_2^{j-1} + x_2^{j-1} - t_1^{j-1,2} - t_1^{j,1};\ 0)$$

$$\cdots\cdots\cdots\cdots\cdots\cdots\cdots\cdots\cdots\cdots\cdots\cdots\cdots\cdots\cdots\cdots$$

$$x_k^j = max\left[t_k^{j-1} + \sum_{i=2}^{k-1} t_i^{j-1,1} + \sum_{i=2}^{k} x_i^{j-1} - \left(\sum_{i=1}^{k-1} t_i^{j,1} + t_1^{j-1,2} + \sum_{i=2}^{k-1} x_i^j\right);\ 0\right] \qquad (5)$$

$$j = 3,\ 4,\ \ldots,\ n; \quad k = 3,\ 4,\ \ldots,\ m.$$

From relationships (3) there follows:

$$x_2^2 + x_3^2 = max\left[t_3^1 + t_2^{1,1} - \left(\sum_{i=1}^{2} t_i^{2,1} + t_1^{1,2}\right);\ t_2^1 - (t_1^{1,2} + t_1^{2,1});\ 0\right]$$

$$\sum_{i=2}^{4} x_i^2 = max\left[t_4^1 + \sum_{i=2}^{3} t_i^{1,1} - \left(\sum_{i=1}^{3} t_i^{2,1} + t_1^{1,2}\right);\ t_3^1 + t_2^{1,1} -\right.$$

$$\left. - \left(\sum_{i=1}^{2} t_i^{2,1} + t_1^{1,2}\right);\ t_2^1 - (t_1^{1,2} + t_1^{2,1});\ 0\right]$$

$$\cdots\cdots\cdots\cdots\cdots\cdots\cdots\cdots\cdots\cdots\cdots\cdots\cdots\cdots\cdots\cdots$$

$$\sum_{i=2}^{k} x_i^2 = max\left[t_k^1 + \sum_{i=2}^{k-1} t_i^{1,1} - \left(\sum_{i=1}^{k-1} t_i^{2,1} + t_1^{1,2}\right);\ t_{k-1}^1 + \sum_{i=2}^{k-2} t_i^{1,1} -\right.$$

$$\left. - \left(\sum_{i=1}^{k-2} t_i^{2,1} + t_1^{1,2}\right);\ \ldots;\ t_3^1 + t_2^{1,1} - \left(\sum_{i=1}^{2} t_i^{2,1} + t_1^{1,2}\right);\ t_2^1 - (t_1^{1,2} + t_1^{2,1});\ 0\right]. \qquad (6)$$

From relationships (4) there follows:

$$\sum_{i=2}^{k} x_i^3 = max\left\{\max_{3 \leqslant u \leqslant k}\left[t_u^2 + \sum_{i=2}^{u-1} t_i^{2,1} + \sum_{i=2}^{u} x_i^2 - \left(\sum_{i=1}^{u-1} t_i^{3,1} + t_1^{2,2}\right)\right];\right.$$

$$\left. t_2^2 + x_2^2 - (t_1^{2,2} + t_1^{3,1});\ 0\right\};\ k = 3,\ \ldots,\ m. \qquad (7)$$

From relationships (5) there follows:

$$\sum_{i=2}^{k} x_i^j = max\left\{\max_{3 \leqslant u \leqslant k}\left[t_u^{j-1} + \sum_{i=2}^{u-1} t_i^{j-1,1} + \sum_{i=2}^{u} x_i^{j-1} - \left(\sum_{i=1}^{u-1} t_i^{j,1} + t_1^{j-1,2}\right)\right];\right.$$

$$\left. t_2^{j-1} + x_2^{j-1} - t_1^{j-1,2} - t_1^{j,1};\ 0\right\}. \qquad (8)$$

We can see, also in Fig. 2, that for a $p \in \mathcal{P}$ there are relationships:

$$\left.\begin{aligned} y_2^2 &= t_1^{1,2} + t_1^{2,1} + x_2^2 - t_2^1 \\ y_k^2 &= t_1^{1,2} + \sum_{i=1}^{k-1} t_i^{2,1} + \sum_{i=2}^{k} x_i^2 - \left( \sum_{i=2}^{k-1} t_i^{1,1} + t_k^1 \right);\ k = 3,\ \ldots,\ m. \end{aligned}\right\} \tag{9}$$

$$\left.\begin{aligned} y_2^3 &= t_1^{2,2} + t_1^{3,1} + x_2^3 - (t_2^2 + x_2^2) \\ y_k^3 &= t_1^{2,2} + \sum_{i=1}^{k-1} t_i^{3,1} + \sum_{i=2}^{k} x_i^3 - \left( t_k^2 + \sum_{i=2}^{k-1} t_i^{2,1} + \sum_{i=2}^{k} x_i^2 \right);\ k = 3,\ \ldots,\ m \end{aligned}\right\} \tag{10}$$

. . . . . .

$$y_k^j = t_1^{j-1,2} + \sum_{i=1}^{k-1} t_i^{j,1} + \sum_{i=2}^{k} x_i^j - \left( t_k^{j-1} + \sum_{i=2}^{k-1} t_i^{j-1,1} + \sum_{i=2}^{k} x_i^{j-1} \right. \cdot \tag{11}$$

From relationships (9) there follows:

$$\sum_{i=2}^{k} y_i^2 = (k-1)\, t_1^{1,2} + \sum_{i=1}^{k-1} (k-i)\, t_i^{2,1} + \sum_{i=2}^{k} (k-i+1)\, x_i^2 -$$

$$- \left[ \sum_{i=2}^{k} t_i^1 + \sum_{i=2}^{k-1} (k-i)\, t_i^{1,1} \right];\ k = 3,\ \ldots,\ m. \tag{12}$$

From relationships (10) there follows:

$$\sum_{i=2}^{k} y_i^3 = (k-1)\, t_1^{2,2} + \sum_{i=1}^{k-1} (x-i)\, t_i^{3,1} + \sum_{i=2}^{k} (k-i+1)\, x_i^3 -$$

$$- \left[ \sum_{i=2}^{k} t_i^2 + \sum_{i=2}^{k-1} (k-i)\, t_i^{2,1} + \sum_{i=2}^{k} (k-i+1)\, x_i^2 \right];\ k = 3,\ \ldots,\ m. \tag{13}$$

. . . . . .

From relationships (11) there follows:

$$\sum_{i=2}^{k} y_i^j = (k-1)\, t_1^{j-1,2} + \sum_{i=1}^{k-1} (k-i)\, t_i^{j,1} + \sum_{i=2}^{k} (k-i+1)\, x_i^j -$$

$$- \left[ \sum_{i=2}^{k} t_i^{j-1} + \sum_{i=2}^{k-1} (k-i)\, t_i^{j-1,1} + \sum_{i=2}^{k} (k-i+1)\, x_i^{j-1} \right];\ k = 3,\ \ldots,\ m. \tag{14}$$

From relationships (6) and (12) there follows:

$$\sum_{i=2}^{k} y_i^2 = \sum_{l=2}^{k-1} \max_{2 \leqslant u \leqslant l} \left[ \sum_{i=u}^{l} (t_i^{2,1} - t_i^{1,1}) + t_u^1 - t_{l+1}^1 ; \ 0 \right] +$$

$$+ \max \left[ t_1^{2,1} + t_1^{1,2} - t_2^1 ; \ 0 \right] ; \ k = 3, \ ..., \ m. \tag{15}$$

Similarly, from (7) and (13) there follows:

$$\sum_{i=2}^{k} y_i^3 = \sum_{l=2}^{k-1} \max_{2 \leqslant u \leqslant l} \left[ \sum_{i=u}^{l} (t_i^{3,1} - t_i^{2,1}) - \sum_{i=u+1}^{l+1} x_i^2 + t_u^2 - t_{l+1}^2 ; \ 0 \right] +$$

$$+ \max \left[ t_1^{3,1} + t_1^{2,2} - t_2^2 - x_2^2 ; \ 0 \right] ; \ k = 3, \ ..., \ m. \tag{16}$$

From relationships (8) and (14) we obtain the general relationship:

$$\sum_{i=2}^{k} y_i^j = \sum_{l=2}^{k-1} \max_{2 \leqslant u \leqslant l} \left[ \sum_{i=u}^{l} (t_i^{j,1} - t_i^{j-1,1}) - \sum_{i=u+1}^{l+1} x_i^{j-1} + t_u^{j-1} - t_{l+1}^{j-1} ; \ 0 \right] +$$

$$+ \max \left[ t_1^{j,1} + t_1^{j-1,1} - t_2^{j-1} - x_2^{j-1} ; \ 0 \right] ; \ k = 3, \ ..., \ m. \tag{17}$$

From relationship (17) there follows:

$$\sum_{i=2}^{k} y_i^j \leqslant \sum_{l=2}^{k-1} \max_{2 \leqslant u \leqslant l} \left[ \sum_{i=u}^{l} (t_i^{j,1} - t_i^{j-1,1}) + t_u^{j-1} - t_{l+1}^{j-1} - \sum_{i=u+1}^{l+1} x_i^{j-1} + \right.$$

$$\left. + \min_{l=k-1} x_k^{j-1} ; \ 0 \right] + \max \left[ t_1^{j,1} + t_1^{j-1,1} - t_2^{j-1} - x_2^{j-1} ; \ 0 \right] \leqslant$$

$$\leqslant \sum_{l=2}^{k-1} \max_{2 \leqslant u \leqslant l} \left[ \sum_{i=u}^{l} (t_i^{j,1} - t_i^{j-1,1}) + t_u^{j-1} - t_{l+1}^{j-1} - \sum_{i=u+1}^{l+1} x_i^{j-1} + \min_{\substack{u \leqslant k-2 \\ l \geqslant k-2}} x_{k-1}^{j-1} + \min_{l=k-1} x_k^{j-1} \right] +$$

$$+ \max \left[ t_1^{j,1} + t_1^{j-1,1} - t_2^{j-1} - x_2^{j-1} ; \ 0 \right] \leqslant \ ... \ \leqslant$$

$$\leqslant \sum_{l=2}^{k-1} \max_{2 \leqslant u \leqslant l} \left[ \sum_{i=u}^{l} (t_i^{j,1} - t_i^{j-1,1}) + t_u^{j-1} - t_{l+1}^{j-1} - x_3^{j-1} ; \ 0 \right] +$$

$$+ \max \left[ t_1^{j,1} + t_1^{j-1,1} - t_2^{j-1} - x_2^{j-1} ; \ 0 \right] \leqslant$$

$$\leqslant \sum_{l=2}^{k-1} \max_{2 \leqslant u \leqslant l} \left[ \sum_{i=u}^{l} (t_i^{j,1} - t_i^{j-1,1}) + t_u^{j-1} - t_{l+1}^{j-1} ; \ 0 \right] +$$

$$+ max\,[t_1^{j,1} + t_1^{j-1,1} - t_2^{j-1} - x_2^{j-1};\ 0] \leqslant$$

$$\leqslant \sum_{l=2}^{k-1} \max_{2 \leqslant u \leqslant l} \left[ \sum_{i=u}^{l} (t_i^{j,1} - t_i^{j-1,1}) + t_u^{j-1} - t_{l+1}^{j-1};\ 0 \right] +$$

$$+ max\,[t_1^{j,1} + t_1^{j-1,1} - t_2^{j-1};\ 0] \qquad (18)$$

because $x_i^j \geqslant 0$, $i = 2, 3, ..., m$; $j = 2, 3, ..., n$.

Consider:

$$Y_1^{b,a} = \sum_{l=2}^{k-1} \max_{2 \leqslant u \leqslant l} \left[ \sum_{i=u}^{l} (t_i^{a,1} - t_i^{b,1}) + t_u^b - t_{l+1}^b;\ 0 \right] + max\,(t_1^{a,1} + t_1^{b,1} - t_2^b;\ 0)$$

$$Y_2^{b,a} = \sum_{l=2}^{k-1} \max_{2 \leqslant u \leqslant l} \left[ \sum_{i=u}^{l} (t_i^{a,1} - t_i^{b,1}) + t_u^b - t_{l+1}^b;\ 0 \right] +$$

$$+ max\,(t_1^{a,1} + t_1^{b,1} - t_2^b - x_2^b;\ 0)$$

$$Y_3^{b,a} = \sum_{l=2}^{k-1} \max_{2 \leqslant u \leqslant l} \left[ \sum_{i=u}^{l} (t_i^{a,1} - t_i^{b,1}) + t_u^b - t_{l+1}^b - x_3^b;\ 0 \right] +$$

$$+ max\,(t_1^{a,1} + t_1^{b,1} - t_2^b - x_2^b;\ 0)$$

.....

$$Y_{k-2}^{b,a} = \sum_{l=2}^{k-1} \max_{2 \leqslant u \leqslant l} \left[ \sum_{i=u}^{l} (t_i^{a,1} - t_i^{b,1}) + t_u^b - t_{l+1}^b - \sum_{i=u+1}^{l+1} x_i^b + \sum_{\substack{u \leqslant k-2 \\ l \geqslant k-2}} x_{k-1}^b + x_{l=k-1}^b;\ 0 \right]$$

$$Y_{k-1}^{b,a} = \sum_{l=2}^{k-1} \max_{2 \leqslant u \leqslant l} \left[ \sum_{i=u}^{l} (t_i^{a,1} - t_i^{b,1}) + t_u^b - t_{l+1}^b - \sum_{i=u+1}^{l+1} x_i^b + x_{l=k-1}^b;\ 0 \right]$$

$$Y_k^{b,a} = \sum_{l=2}^{k-1} \max_{2 \leqslant u \leqslant l} \left[ \sum_{i=u}^{l} (t_i^{a,1} - t_i^{b,1}) + t_u^b - t_{l+1}^b - \sum_{i=u+1}^{l+1} x_i^b;\ 0 \right]. \qquad (19)$$

Using notations (19), relationship (18) can be written thus:

$$\sum_{i=2}^{k} y_i^j = Y_k^{j-1,1} \leqslant Y_{k-1}^{j-1,j} \leqslant ... \leqslant Y_1^{j-1,j}. \qquad (20)$$

With the sid of relationship (17) we can get relationship:

$$\sum_{i=2}^{k} y_i^j \geqslant \sum_{l=2}^{k-1} \left\{ \max_{2 \leqslant u \leqslant l} \left[ \sum_{i=u}^{l} (t_i^{j,1} - t_i^{j-1,1}) + t_u^{j-1} - t_{l+1}^{j-1} - \right. \right.$$

$$\left. \left. - \sum_{i=u+1}^{l+1} x_i^{j-1} + \underset{l=k-1}{x_k^{j-1}} \; ; \; 0 \right] - \underset{l=k-1}{x_k^{j-1}} \right\} + max\,[t_1^{j,1} + t_1^{j-1,1} - t_2^{j-1} - x_2^{j-1}; \; 0] \geqslant$$

$$\geqslant \sum_{l=2}^{k-1} \left\{ \max_{2 \leqslant u \leqslant l} \left[ \sum_{i=u}^{l} (t_i^{j,1} - t_i^{j-1,1}) + t_u^{j-1} - t_{l+1}^{j-1} - \sum_{i=u+1}^{l+1} x_i^{j-1} + \underset{\substack{u \leqslant k-2 \\ l \geqslant k-2}}{x_{k-1}^{j-1}} + \underset{l=k-1}{x_k^{j-1}} \right] - \right.$$

$$\left. - \sum_{\substack{i=k-1 \\ l \geqslant k-2}}^{l+1} x_i^{j-1} \right\} + max\,[t_1^{j,1} + t_1^{j-1,1} - t_2^{j-1} - x_2^{j-1}; \; 0] \geqslant \ldots \geqslant$$

$$\geqslant \sum_{l=2}^{k-1} \left\{ \max_{2 \leqslant u \leqslant l} \left[ \sum_{i=u}^{l} (t_i^{j,1} - t_i^{j-1,1}) + t_u^{j-1} - t_{l+1}^{j-1}; \; 0 \right] - \sum_{i=3}^{l+1} x_i^{j-1} \right\} +$$

$$+ max\,[t_1^{j,1} + t_1^{j-1,1} - t_2^{j-1} - x_2^{j-1}; \; 0] \geqslant$$

$$\geqslant \sum_{l=2}^{k-1} \left\{ \max_{2 \leqslant u \leqslant l} \left[ \sum_{i=u}^{l} (t_i^{j,1} - t_i^{j-1,1}) + t_u^{j-1} - t_{l+1}^{j-1}; \; 0 \right] - \sum_{i=3}^{l+1} x_i^{j-1} \right\} +$$

$$+ max\,[t_1^{j,1} + t_1^{j-1,1} - t_2^{j-1}; \; 0] - x_2^{j-1}. \tag{21}$$

Consider:

$$X_{k_1,\,k}^{l-1,\,l} = \sum_{i=k_1}^{k} x_i^l \tag{22}$$

$$\overline{X}_k^{a,\,b} = max \left[ \max_{2 \leqslant u \leqslant k-1} \left( \sum_{i=2}^{u} (t_i^{a,1} - \sum_{i=1}^{u} t_i^{b,1} + t_{u+1}^{a,1} - t_1^{a,2} \right); \right.$$

$$\left. t_2^a - t_1^{a,2} - t_1^{b,1}; \; 0 \right]; \; a \neq b. \tag{23}$$

Form relationships (6) and (8) there follows:

$$\left. \begin{aligned} X_{2,\,k}^{1,2} &= \overline{X}_k^{1,2} \\ X_{2,\,k}^{l-1,\,l} &\leqslant X_{2,\,k}^{l-2,\,l-1} + X_k^{l-1,\,l} = \sum_{j=1}^{l-1} X_k^{j,\,j+1}; \; l = 3, \ldots, n. \end{aligned} \right\} \tag{24}$$

With the aid of notations in (19) and (22), relationships (20) and (21) can be written:

$$Y_1^{l-1,\,l} - \sum_{i=3}^{k} X_{3,\,i}^{l-2,\,l-1} - x_2^{l-1} \leqslant Y_2^{l-1,\,l} - \sum_{i=3}^{k} X_{3,\,i}^{l-1,\,l} \leqslant$$

$$\ldots \leqslant Y_{k-1}^{l-1,\,l} - X_{k,\,k}^{l-2,\,l-1} \leqslant Y_k^{l-1,\,l} = \sum_{i=2}^{k} y_i^l \leqslant Y_{k-1}^{l-1,\,l} \leqslant \ldots \leqslant Y_1^{l-1,\,l}. \qquad (25)$$

Because we see that:

$$\sum_{i=3}^{k} X_{t,\,i}^{l-2,\,l-1} = \sum_{i=2}^{k} X_{2,\,i}^{l-2,\,l-1} - \sum_{i=2}^{t-1} (k-i+1)\, x_i^{l-1},$$

relationship (25) can also be writen:

$$Y_1^{l-1,\,l} + (k-2)\, x_2^{l-1} - \sum_{i=2}^{k} X_{2,\,i}^{l-2,\,l-1} \leqslant Y_2^{l-1,\,l} + (k-1)\, x_2^{l-1} +$$

$$+ (k-2)\, x_3^{l-1} - \sum_{i=2}^{k} X_{2,\,i}^{l-2,\,l-1} \leqslant \ldots \leqslant Y_{k-1}^{l-1,\,l} + \sum_{i=2}^{k} (k-i+1)\, x_i^{l-1} -$$

$$- \sum_{i=2}^{k} X_{2,\,i}^{l-2,\,l-1} \leqslant Y_k^{l-1,\,l} = \sum_{i=2}^{k} y_i^l \leqslant Y_{k-1}^{l-1,\,l} \leqslant \ldots \leqslant Y_1^{l-1,\,l}, \qquad (26)$$

or, using relationship (23) and totalizing after $l$, we get:

$$\sum_{l=2}^{n} \left[ Y_1^{l-1,\,l} - \sum_{\substack{j=1 \\ l \geqslant 3}}^{l-2} \sum_{i=2}^{k} \overline{X}_i^{j,\,j+1} \right] \leqslant$$

$$\leqslant \sum_{l=2}^{n} \left[ Y_1^{l-1,\,l} + (k-2)\, x_2^{l-1} - \sum_{\substack{j=1 \\ l \geqslant 3}}^{l-2} \sum_{i=2}^{k} \overline{X}_i^{j,\,j+1} \right] \leqslant$$

$$\leqslant \sum_{l=2}^{n} \left[ Y_2^{l-1,\,l} + \sum_{i=2}^{3} (k-i+1)\, x_i^{l-1} - \sum_{\substack{j=1 \\ l \geqslant 3}}^{l-2} \sum_{i=2}^{k} \overline{X}_i^{j,\,j+1} \right] \leqslant \ldots \leqslant$$

$$\leqslant \sum_{l=2}^{n} \left[ Y_{k-1}^{l-1,\,l} + \sum_{i=2}^{k} (k-i+1)\, x_i^{l-1} - \sum_{\substack{j=1 \\ l \geqslant 3}}^{l-2} \sum_{i=2}^{k} \overline{X}_i^{j,\,j+1} \right] \leqslant Y_k^{l-1,\,l} =$$

$$= \sum_{=2}^{n} \sum_{i=2}^{k} y_i^l \leqslant \sum_{l=2}^{n} Y_{k-1}^{l-1,\,l} \leqslant \ldots \leqslant \sum_{l=2}^{n} Y_1^{l-1,\,l}. \qquad (27)$$

Making conspicuous $p \in \mathcal{P}$ and writing:

$$\overline{X} = \max_{p \in \mathcal{P}} \sum_{l=3}^{n} \sum_{i=2}^{m} \sum_{j=1}^{l-2} \overline{X}_{i,\,p}^{j,\,j+1}$$

there follows:

$$\min_{p \in \mathcal{P}} \sum_{l=2}^{n} Y_{1,\,p}^{l-1,\,l} - \overline{X} \leqslant \min_{p \in \mathcal{P}} \sum_{l=2}^{n} \left[ Y_{1,\,p}^{l-1,\,l} - \sum_{\substack{i=2 \\ l \geqslant 3}}^{m} \sum_{j=1}^{l-2} \overline{X}_i^{j,\,j+1} \right]_p$$

$$\min_{p \in \mathcal{P}} \sum_{l=2}^{n} \left[ Y_1^{l-1,\,l} + (m-2)\, x_2^{l-1} \right]_p - \overline{X} \leqslant \min_{p \in \mathcal{P}} \sum_{l=2}^{n} \left[ Y_1^{l-1,\,l} + (m-2)\, x_2^{l-1} - \right.$$

$$\left. - \sum_{\substack{i=2 \\ l \geqslant 3}}^{m} \sum_{j=1}^{l-2} \overline{X}_i^{j,\,j+1} \right]_p$$

.....

$$\min_{p \in \mathcal{P}} \sum_{l=2}^{n} \left[ Y_{m-1}^{l-1,\,l} + \sum_{i=2}^{k} x_i^{l-1}(m-i+1) \right]_p - \overline{X} \leqslant \min_{p \in \mathcal{P}} \sum_{l=2}^{n} \left[ Y_{m-1}^{l-1,\,l} + \right.$$

$$\left. + \sum_{i=2}^{m} (m-i+1)\, x_i^{l-1} - \sum_{\substack{i=2 \\ l \geqslant 3}}^{m} \sum_{j=1}^{l-2} \overline{X}_i^{j,\,j+1} \right]_p . \tag{28}$$

Consider:

$$\left.\begin{aligned} Y_1 &= \sum_{j=2}^{n} Y_1^{j-1,\,j} \\ Y_r &= \sum_{j=2}^{n} Y_1^{j-1,\,j} + \sum_{i=2}^{r} (m-i+1)\, x_i^{j-1} - x_{r=2}^{j-1}; \quad r = 2,\ 3,\ \ldots,\ m-1 \end{aligned}\right\} \tag{29}$$

We see that we can infer from (27) and (28):

$$\left.\begin{aligned} &\min_{p \in \mathcal{P}} Y_1 - \overline{X} \leqslant M \leqslant \min_{p \in \mathcal{P}} Y_1 \\ &\min_{p \in \mathcal{P}} Y_2 - \overline{X} \leqslant M \leqslant \min_{p \in \mathcal{P}} Y_2 \\ &\ldots\ldots\ldots\ldots\ldots\ldots \\ &\min_{p \in \mathcal{P}} Y_{m-1} - \overline{X} \leqslant M \leqslant \min_{p \in \mathcal{P}} Y_{m-1} \\ &\min_{p \in \mathcal{P}} Y_m = M. \end{aligned}\right\} \tag{30}$$

Consider $r = 1$ and

$$y_r = \{Y_r = Y^r(p_k)/Y^r(p_1) = \overline{Y}_r \leqslant Y^r(p_2) \leqslant \ldots \leqslant Y^r(p_k) \ldots; p_k \in \mathcal{P}\}. \quad (31)$$

If:

$$\overline{Y}_r + \overline{X} \geqslant Y^r(p_t), \quad 1 \leqslant t < n!, \quad p_t \in \mathcal{P} \quad (32)$$

and

$$\overline{Y}_r + \overline{X} < Y^r(p_{t+1}) \quad (33)$$

then $\bar{p} \in \mathcal{P}$ for which $M = \sum_{j=2}^{n} \sum_{i=2}^{m} y^j_{i,\bar{p}}$ pertains to set

$$P_1 = \{p_j \in \mathcal{P} / j = 1, 2, \ldots, t\}.$$

In agreement with relationship $r - a$ in (30), relationship (32) is verified at least for $t = 1$.

If we assume $\bar{p} \in P_1 \cup \{p_{t+1}\}$ we can easily reach a contradiction.

Indeed, according to relationship (27), we can write:

$$Y^r(p_{t+1}) \leqslant M + \sum_{l=3}^{n} \sum_{i=2}^{m} \sum_{j=1}^{l-2} \overline{X}^{j,\,j+1}_{i,\,p_{t+1}} \quad (34)$$

if $\bar{p} = p_{t+1}$.

From (33) and (34) there follows:

$$\overline{Y}_r + \overline{X} \leqslant M + \sum_{l=3}^{n} \sum_{i=2}^{m} \sum_{j=1}^{l-2} \overline{X}^{j,\,j+1}_{i,\,p_{t+1}} \quad (35)$$

which is impossible.

Consider $\mathcal{P} := p_1$; $r := r + 1$

We see that it is possible to resume the demonstration beginning with relationship (31), for relationship $r^{\text{th}}$ in (30).

From (30), after $m$ iterations at most, we obtain permutation $\bar{p} \in \mathcal{P}$ to which corresponds $M$.

In order to increase the sorting speed of permutation $\bar{p} \in p_1$ we can eliminate those permutations $p_s$ for which:

$$Y_r + \sum_{l=3}^{n} \sum_{i=2}^{m} \sum_{j=1}^{l-2} \overline{X}^{j,\,j+1}_{i,\,p_s} < Y(p_s), \quad 1 \leqslant s \leqslant t. \quad (36)$$

The demonstration of condition (36) is made in the same manner as the demonstration of condition (33.).

To ascertain $M$, it is necessary to compute $Y_r$ ($r = 1, 2, \ldots$) and $X$. In [3] it is pointed out that the ascertainment of $X_r$ and $X$ is achieved by computing the minimal length Hamiltonian path in a graph.

Fig. 3 illustrates the flow chart of the algorithm, where:

— $t^i_{u_i}$ is the unitary time for each operation $0^j_i$, minute/piece;

— $k_l$ is the number of pieces in the batch of a given detail.

This algorithm is to be applied in agreement with a contract signed by the Computation Centre of the Economic Cybernetics Department of the Academy of Social Sciences with a national economic organization in view of production operative scheduling.

## REFERENCES


1. ELMAGHRABY S. E.: *Proiectarea sistemelor de producție.* Editura tehnică, 1968, Translation — U.S.A.
2. JOHNSON S.: *Optimal Two and Three-Stage Production Schedules with Set-up Times Included.* Naval Research Logistics Quarterly, No. 1, 1954.
3. MIERLEA V.: *Algoritm pentru ordonanțarea a n lucrări pe m mașini.* Studii și cercetări de calcul economic și cibernetică economică, No. 5, Bucharest, 1971.


## ALGORITHMES POUR L'ORDONNANCEMENT DE $n$ OUVRAGES SUR $m$ MACHINES AYANT ENTRE LE DEMARRAGE ET L'ARRET UN TEMPS MINIME INTEROPERATIONS


L'algorithme de calcul présenté se réfère à la détermination de la solution optimale de l'ordonancement séquenciel de $n$ ouvrages sur $m$ machines ayant entre le démarrage et l'arrêt un temps minime interopérations, de sorte que le temps de non-utilisation des machines $m_i$ (entre les opérations des ouvrages $L^j$) soit minime.


Mettant en évidence quelques relations entre $x^j_i$ (le temps non-utilisé par les machines pour l'ouvrage $L^j$ entre les opérations $0^j_{i-1}$ et $0^j_i$, considérant que $0^j_i = 0^{j,1}_i + 0^{j,2}_i$), $y^j_{i-1}$ (le temps non-utilisé par la machine $m_i$ entre les opérations $0^{j-1}_i$ et $0^j_i$), $0^j_i$ (le temps d'obtenir un stock minimum d'opérations $0^j_{i-1}$, que nous notons par $0^{j,1}_{i-1}$ et qui sont nécessaires pour pouvoir commencer l'opération $0^j_i$) et $b^j_i$ (le temps minimum nécessaire pour finir l'opération $0^j_i$, après avoir terminé l'opération $0^j_{i-1}$), on obtient un algorithme pour déterminer $M$ de la relation

$$M = \min_{p \in P} \sum_{i=2}^{m} \sum_{j=2} J^j_{i,p}$$

où $P$ représente la multitude des permutations des ouvrages $L^j$.

# АЛГОРИТМ ДЛЯ СОСТАВЛЕНИЯ ДОКУМЕНТОВ НА ВЫПОЛНЕНИЕ $n$ РАБОТ НА $m$ МАШИН С НАИМЕНЬШИМ МЕЖОПЕРАЦИОННЫМ ВРЕМЕНЕМ ПРИ ПУСКЕ И ОСТАНОВКЕ

Представляемый расчетный алгоритм касается определения оптимального решения секвенционного составления документов на выполнение $n$ работ на $m$ машин с наименьшим межоперационным временем при пуске и остановке таким образом, чтобы время простоя машин $m_i$ (между операциями работ $L^j$) было наименьшим.

Выявляя отношения между $x_i^j$ (время простоя машин для работы $L^j$ между операциями $0_{i-1}^{j,\,1}$ и $0_i^j$, считая, что $0_i^j = 0_i^{j,\,1} + 0_i^{j,\,2}$), $y_{i-1}^j$ (время простоя машины $m_i$ между операциями $0_i^{j-1}$ и $0_i^j$), $0_i^j$ (время получения наименьшего задела операций $0_{i-1}^j$, обозначаемых $0_{i-1}^{j,\,1}$ и необходимых для начала операции $0_i^j$) и $b_i^j$ (наименьшее время, необходимое для окончания операции $0_i^j$ после того, как окончилась операция $0_{i-1}^j$), получаем алгоритм для определения величины $M$ из отношения

$$M = \min_{p \in P} \sum_{i=2}^{m} \sum_{j=2}^{n} y_i^j,\ p,$$

где $P$ представляет собой множество перестановок работ $L^j$.