Dr. Engineer ŞTEFAN BÎRLEA

The Analysis of Entropic Conditions — a New Method of Investigating the Cybernetic-Industrial Systems (II)

"The creation of a modern economy of a high efficiency imposes the promotion in all branches of the advanced science and technology achievements".

Nicolae Ceauşescu

Report presented at the National Conference of the Romanian Communist Party, on July 19—21, 1972.

2.1. Conception and general formulation of the method

The enunciated theory according to which "the entropic condition is a general property of the cybernetic systems" causes the application of relations (3, 4, 5)*) on the establishment of the degree of organization to be liable to any category of systems. The present study proposes to formulate the basic principles on the application of the method to the industrial systems.

The fundamental objective of the method is to determine the size of the entropy of the cybernetic-industrial systems and to use it for establishing an indicator which measures the degree of organization in a system.

The method must be applied in a differentiated way, because while at the continuous systems, the entropy is generated by the stability in the functioning of the means of labour-their fiability respectively and by the entro-

*) See Dr. Engineer Ştefan Bîrlea: *The Analysis of Entropic Conditions a New Method for Investigating Cybernetic-Industrial Systems.* Economic Computation and Economic Cybernetics Studies and Research, no. 1, 1973.

py contained in the object of work (the probability of a change in the internal structure and in the physical-mechanical properties, etc.), at the discrete systems the entropic components are much more numerous, etc. That is the reason why we shall separately deal with the principles on which the method proposed by us is based.

A. THE ANALYSIS OF THE ENTROPIC CONDITION OF CONTINUOUS SYSTEMS

According to our previous observation, the entropy of the continuous systems is calculable as the sum of the entropies of the two component subsystems

$$H(S) = H(S_{mm}) + H(S_{0m})$$

where:

$H(S)$ represents the entropy of the system;
$H(S_{mm})$ — the entropy of the means of labour;
$H(S_{0m})$ — the entropy. of the object of work.

A scheme of principle of a continuous process may be considered that presented in Fig. 3
where:

S_{0m} — represents the system of the objects of work and S_{mm} the system of the means of labour:

$$S_{0m} = S_{1\,0m} U S_{2\,0m}$$

where

$$S_{1\,0m} = \{x(S),\ y(S) \mid I\}$$

thus, a system with an identity I operator (which does not perturb the signal coming from the medium) and

$$S_{2\,0m} = \{y_s,\ y_{0m} \mid U_{0m}\}$$

thus, a system with an operator disturbed by operator U_{0m}, which may be the lack of quantity, quality or structure, etc. in the continuous supply of the system S_{mm} (means of labour).

Consequently, the system S_{0m} will undergo a transformation of the form:

$$S_{0m} = \{x(S),\ y_{0m} \mid I,\ U_{0m}\}$$

thus

$$y_{0m} = x(S)\,(I - IU_{0m})$$

or

$$y_{0m} = Ix(S)\,(1 - U_{0m}).$$

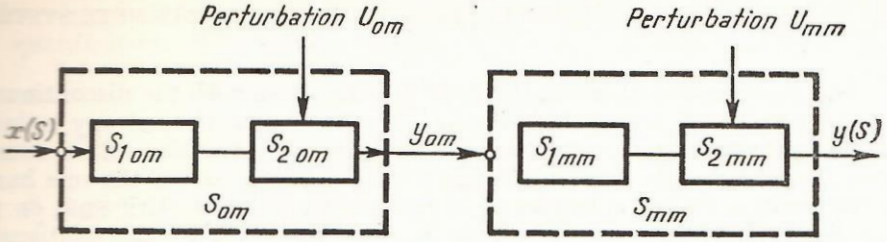

Fig. 3

If one considers the norms of the two operators, then $\| I \|$, and the **norm** $\| U_{om} \|$ a scaler; the probability for the system to function without **perturbations** is:

$$p_{om} = \frac{\| 1 - U_{om} \|}{\| I \|}$$

where:

$$\| U_{om} \| \leqslant 1$$

The entropy introduced by the object of work will thus be:

$$H(S_{om}) = - p_{om} \log p_{om} - (1 - p_{om}) \log (1 - p_{om}).$$

For the system means of labour S_{mm} it is similarly inferred that **the entropy** will be given by relation:

$$H(S_{mm}) = p_{mm} \log p_{mm} - (1 - p_{mm}) \log (1 - p_{mm})$$

where:

$$p_{mm} = \frac{\| \varphi - U_{mm} \|}{\| \varphi \|}$$

as $S_{mm} = \{y_{om}, y(S) \mid \varphi, U_{mm}\}$ where φ is the operator of the class of **productive** cybernetic-industrial operators.

The total transfer function of system S is:

$$F(S) = F(S_{mm}) * F(S_{om})$$

thus

$$F(S) = I \cdot [(\varphi - U_{mm}) * (1 - U_{om})]$$

or

$$y(S) = x(S) [(\varphi - U_{mm}) * (1 - U_{om})].$$

Hence it results that in case that $U_{mm} = 0$ (the operator) and $U_{om} = 0$ **we** shall have:

$$y(S) = \varphi \cdot x(S)$$

respectively, the production operator φ remains undisturbed and the **entropy** of system S is null. On the contrary, if one of the disturbing operators $U_{om} = I$, or $U_{mm} = \varphi$, then the entropy is maximum, that is the system gets **disorganized**, because $F(S) = 0$.

Similar consideration can be made in connection with the discontinuous systems, with the difference that in the respective cases, the entropy includes a number of additional components. Indeed, in the industries with a discontinuous flow, the process of achieving a product implies, on the one hand, the composition of the entropies existing at each place of work and, on the other hand, the appearance of a new entropy generated by the relations in which are found the different places of work among them. Thus, we shall always have to do with a compound entropy

$$H(S) = H(S_i) + H(S_i \mid S_{i-1})$$

where:

$H(S)$ represents the entropy of the whole discontinuous system;
$H(S_i)$ — the entropy of the component subsystems;
$H(S_i \mid S_{i-1})$ — the relation entropy among the inter-connecting systems (considering the fields of conditioned probability).

The first factor is linked with the intimate structure of the set of systems and can be influenced to a smaller extent and this almost proportional to the increase of the share of technological entropy, as it happens, for example, in the continuous processes.

The essential difference consists in the fact that while in the first case, the entropy introduced by the human factor can be considered as being included in the calculus, implicitely through the probabilities P_{om} and p_{mm}, in the case of discrete systems, this is no longer possible. The general scheme of such processes might be considered as being that in Fig. 4.

Considering that $S_i = S_{om} US_{fm} US_{mm} = S_{om} US_{jm} US_{mm}$, that is a set of three systems: object of work, manpower and means of labour, we note the appearance of a number of additional disturbing elements.

In the first place, appearing outside the system is perturbation $U(S_{i-1})$, which comes from the previous discrete system, but also inside the system at least two additional perturbations appear, linked with manpower: the perturbation of organization of labour (U_{ofm}) whose value is usually $U_{ofm} =$

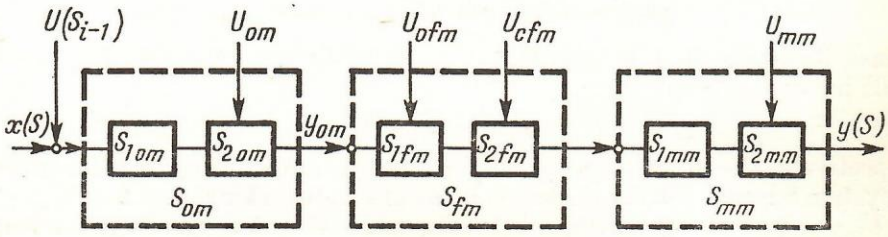

Fig. 4

$= 0$ or $U_{ofm} = 1$ (thus, present or absent) and the perturbation linked with the qualification of manpower (U_{cfm}), which can assume values between

$$\theta < U_{cfm} < I$$

where:

θ represents the null operator;
I — the identity operator.

Applying the same method of analysis as in the previous case, it results that we shall have an entropy which we shall call "the relation entropy", generated by the connection between S_{i-1} and S_i. Thus, in a serial connection we shall have the scheme in Fig. 5.

Conventionally, we shall consider that if perturbation $U(S_{i-1}) \mid S_i = \theta$, then the synchronization between S_{i-1} and S_i is perfectly achieved, where $U(S_{i-1})$, $U(S_i)$, $U(S_{i+1})$ represent the perturbations inside the systems, and $U_m(S_{i-1})$, $U_m(S_i)$, $U_m(S_{i+1})$ are the perturbations deriving from the medium, which appear due to the discrete character of the phenomenon.

In these conditions, also $H(S_{i-1}) \mid S_i = 0$.

It is noticed, however, that the perturbation received into system S_i from system S_{i-1} is equivalent to $U(S_{i-1})$ and, it will thus determine an entropy $H(S_{i-1})$, calculable in keeping with the continuous or discrete character of system S_{i-1}.

At the same time, system S_i is also receiving a perturbation from medium $U_m(S_{i-1})$ signifying, among other things, the discrete correlation existing among systems. If $U_m(S_{i-1}) = \theta$ that is, it is equivalent to operator null, then the system $S = S_{i-1}\ US_i$ is a continuous system. It results that the appearance $U_m(S_{i-1})$ is exclusively linked to the discrete character of the process, that is to interruptions of leap in time. From the classical knowledge about management, it is known that if T is the period of continuous functioning of j work places, we may have various discontinuities as for example (see Fig. 6):

One may note the probability for system S_{i-1} to introduce into the continuous supply of system S_i the following perturbation:

$$U_{i-1} = 1 - \frac{n_p \cdot t_{pi-1}}{T \cdot Km_{i-1}}$$

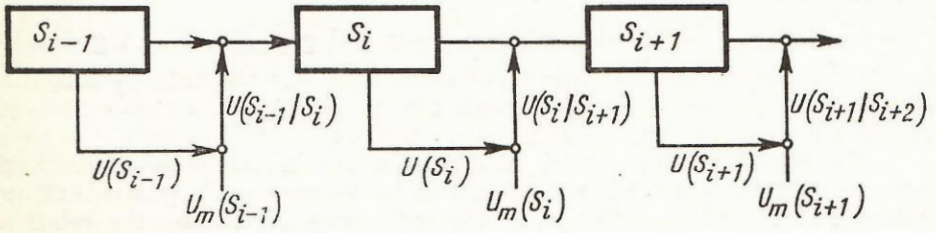

Fig. 5

where:

T is the period of continuous functioning;
n_p — the number of pieces turned out in the period T;
t_{pi} — the time consumed in the production of a unit;
Km — the number of work places of the same kind forming the system. S_{i-1}.

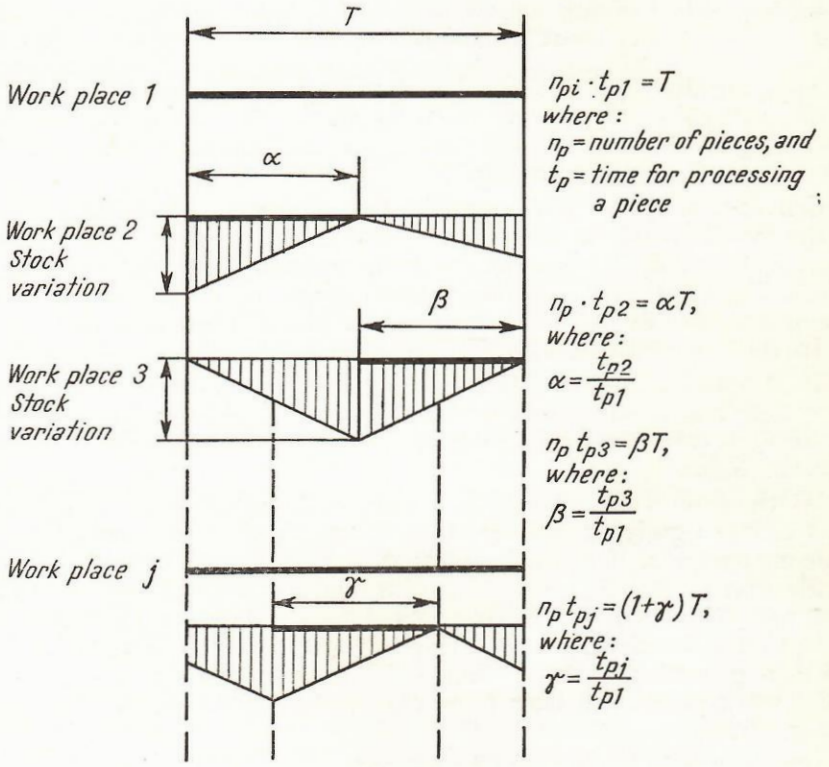

Fig. 6

In conclusion, the relation entropy is:

$$H(S_{i-1}) = p_{i-1} \cdot \log p_{i-1} - U_{i-1} \cdot \log U_{i-1}.$$

Besides the relation entropy $H(S_{i-1})$, the system S_i also contains the entropy of manpower:

$$(- p_{ofm} \log p_{ofm} - U_{ofm} \log U_{ofm}) + (- p_{cfm} \log p_{cfm} - U_{cfm} \log U_{cfm})$$

that is, the organizational entropy of manpower and the entropy linked to software (its qualification). As regards the other entropic components, calculus is the same as at the continuous systems.

The cybernetic conception on discontinuous industrial processes leads us to the conclusion that the main direction for decreasing the general entropy of a system S_i is the reduction of the entropy generated by the relations between the component systems.

The passing to work on tape and the narrowing of the operational range carried out inside the system (in essence, the reduction of the assortment) represent favourable conditions in this direction. Practically, the conception on the method proposed by us creates the possibility of calculating the entropy specific to each cybernetic-industrial process. On this basis, some normative coefficients might be established among the elements determining the entropy, so that the industrial systems should adequately form a hierarchical system.

Efficiency thresholds for specific types of processes and industries might be established among various classes of industrial systems. In the author's opinion, this would considerably facilitate the industrial management and organizational activity and might lead to the utilization and generalization, on a national scale, of the best results, introducing the typification and various elements for the general rationalization of production and work.

In conclusion, in a general formulation, the analysis of the entropic conditions may be defined as a new method for studying the cybernetic-industrial systems, a method which aims at using quantitative elements for measuring the entropy of these systems in view of comparisons.

It results from the systems presented and from the made considerations that in the case of the cybernetic-industrial systems, entropy is a notion intrinsically linked with the level of organization of the respective system. Consequently, the measure of entropy allows the knowing of the level of organization of the system and, consequently, the making of a comparison, from this point of view, among systems regardless of the category and class they belong to. Thus, we can compare an agricultural enterprise to an industrial one, a machine-building enterprise to a building site, etc., a fact which, in the author's opinion, will cause this method to represent a basic instrument in the management of the future.

Further, the method is presented using a number of simplifying hypotheses, its exhaustive treatment remaining, as was shown, a problem of the future.

2.2. General working method on the utilization of the method of the analysis of entropic conditions on the example of industrial systems

As it was pointed out, the possibility of expressing in a *quantitative, commensurable form the level of organization* of an industrial process would allow the estimation of the deviation of a concrete situation in face of a reference situation considered as optimal.

Pursuing the determination of a methodology applicable in practice without particular complications, it is considered that the performances of organizing a productive industrial process may be satisfactorily approximated by estimating the following main indicators:

a) the organization of work places (the way of utilization of the work fund of the equipment, the way of utilization of the equipment from the point of view of the class of precision, the way in which the requirements of technology, etc are satisfied);

b) the way of utilization of manpower (from the point of view of the training of personnel considering the quality of work carried out, or from the point of view of the ensurance of manpower);

c) the quality of execution of the object of work in relation to the restrictions imposed by technology.

For each of these performance indicators, certain optimum (standard) values may be considered. As an example, we can consider as optimum, the following:

a1) for the use of the work fund of the installations, the effective work time of each installation (place of work) should coincide with the available work fund of the respective installation (of course, the planned stationary time, for repair, maintenance activities, etc. will be taken into consideration);

a2) for the use of the type of equipment, the class of precision, for example, according to technological requirements, or as a power in relation to the stress of the technological process or even as an efficiency of processing (operational inter-changeability);

b1) for the use of manpower as optimal normative level one may take into consideration the utilization of personnel at the level of their qualification;

b2) also for manpower, one may consider as an index of organization its effective presence throughout the carrying out of fabrication (number of shifts, the intensive use of work time, etc.);

c1) for the quality of the production achieved one can take as an optimum indicator the complete elimination of rejects;

c2) from the point of view of the object of work, one may consider as an optimum solution the complete or partial elimination of dissynchronization introduced in the process, due to the lack in the supply of the work places.

Considering these optimum values the achievement which represents *the maximum level of organization* of the process of production, the real values obtained in a certain period of time (decade, month, quarter, half year, year) for a certain system of fabrication (section, factory, plant) usually present some *deviations*. They have a tendency going in the same direction, namely, of diminishing the values of the above-mentioned performance indicators in comparison with the optimum values.

The deviations, we are referring to, can be determined for each performance indicator of organization on their *components*; for example, in the case of estimating the utilization of the work time of installations, the diminishings compared to the nominal value can be due to reasons, such as: standing for lack of work, standing for lack of personnel and standing for faults in equipment.

The real values of these components of diminishing the performance indicators of organization can be placed within certain finite limits (beginning from the value zero). Consequently, for estimating the level of organization of the process, these deviations may be considered as some events A_1, A_2, A_3, ...,A_n, to which are associated certain *appearance probabilities* P_1, P_2,...P_n, so that:

$$P_k \geqslant 0,\ 1 \leqslant k \leqslant n;\ \sum_{k=1}^{n} P_k = 1. \tag{7}$$

The values of these probabilities can be correctly determined for each case according to statistical data registered in a certain period of time of observation.*)

Thus, one may calculate also *a level of non-determination* (*an informational entropy*) of the field of probabilities represented by the deviations of the values of the performance indicators which should implicitely express an estimation of the level of organization of the process, as it was shown in the general formulation of the conception on the method proposed by us.

Conventionally, we shall consider that for estimating the level of organization in *the use of the work time of installations* the following *standing probabilities* can be defined:

— the probability of standing for lack of work:

$$P_{11} = \frac{\text{standing time for lack of work}}{\text{total work time}} \tag{8}$$

It is noticed that the use of this probability includes, among other things, the relation entropy;

— the probability of standing for lack of manpower:

$$P_{12} = \frac{\text{standing time for absences}}{\text{total work time}} \tag{9}$$

— probability of standing because of faults in installations (damages):

$$P_{13} = \frac{\text{standing time because of faults}}{\text{total work time}} \tag{10}$$

For each of these events, obviously independent among them (at least in a first approximation) one may calculate the value of the entropy and thus, the level of organization of the respective process.

The events being independent, the entropy of the total event is equal to the sum of entropies, that is:

$$H_1 = \sum_{i=1}^{i=3} H_{1i}$$

where:

$$H_{1i} = - P_{1i} \log_2 P_{1i} - (1 - P_{1i}) \log_2 P_{1i}. \tag{11}$$

It is considered that *the level of organization is maximum* (thus, the performance indices of equal values with highest values) when the *entropy* is equal to zero. Conventionally, we shall call this entropy an organizational entropy.**)

---

*) Such an observation and collection of data was experimentally made by the author with the aid of the D.C.S (Central Statistical Board) Computation Centre for the Bucharest Pump Works, the author availing himself of this opportunity too, to express his sincere thanks.

**) In this case, it is part of the organizational entropy because the components of the entroy are more numerous.

Like any informational entropy, the organizational entropy has a variation corresponding to the curve in Fig. 7.

It is noticed that *entropy* may represent a univocal measure of the level of organization of the process only in the series $0 \leqslant p \leqslant 0.5$; when $p = 0$, the level of organization is maximum and when p = 0. 5 the level of organization is minimum.

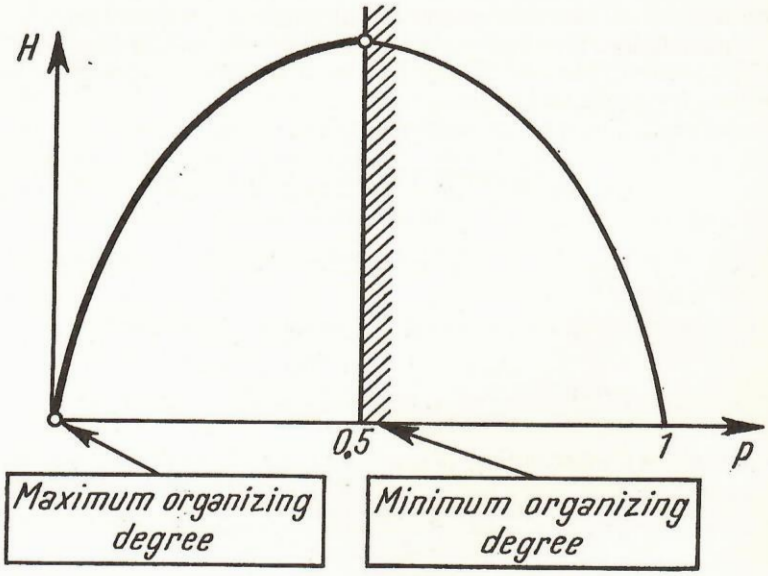

Fig. 7

From the examination, however, of the expressions, the defined probabilities p_{i1} on the three modalities and from the statistical observations at the Bucharest Pump Works, it is noticed that the real values of these probabilities practically vary in the field $P_{1i} = 0, \ldots, 0.2$. (see the results on page 16). In the expression of the organizational entropy H_1 it is possible to attribute to the component entropies, at summation, various *shares of importance* α_i, so that

$$\sum_{i=1}^{i=n} \alpha_i = 1.$$

Besides the three elements previously taken into consideration, we point out that in the case of the estimation of the level of organization of the *rational use of equipment* other probabilities can also be defined. For example, from the point of view of technolcgy, we might have:

$$P_{14} = \frac{\text{work time at the class of precision below the nominal precision}}{\text{total work time of the equipment}} \quad (12)$$

and the adequate organizational entropy can be calculated, respectively a level of organization deriving from it.

To estimate the level of organization of *the use of manpower*, the stationary probability can be defined:

$$P_{21} = \frac{\text{work time for a training under the real qualification of the employee}}{\text{total work time of the employee}} \tag{13}$$

and, the adequate organizational entropy can be calculated:

$$H_{21} = - P_{21} \log_2 P_{21} - (1 - P_{21}) \log_2 (1 - P_{21}) \tag{14}$$

a probability may also exist in the same case

$$P_{22} = \frac{\text{work time for a training over the real qualification of the employee}}{\text{total work time of the employee}} \tag{15}$$

In the case of estimating the quality of fabrication, the stationary probability can be defined:

$$P_4 = \frac{\text{number of defective pieces}}{\text{total number of pieces produced}} \tag{16}$$

and, the corresponding organizational entropy can be calculated:

$$H_4 = - P_4 \log_2 P_4 - (1 - P_4) \log_2 (1 - P_4) \tag{17}$$

Further, we shall calculate *the global organizational entropy* (the events being independent).

2.3.1. *Example and results obtained on the model of a plant*

Setting out from the above methods, the author has made an experiment at the Bucharest Pump Works.

To this purpose, with the aid of the D.C.S. Computation Centre data were collected in connection with a fabrication section, going up to each place of work. The printed form used, comprised, as main elements: the place of work (group of machines), the code of the object of work, the planned time, the worked time and the stationary time. The stationary time was divided into three categories, according to causes: lack of work, absence of manpower and faults in the equipment.

As the establishment of the modality of applying the method was pursued, the following simplifying hypotheses were made in the work:

a) The component fabrication systems have the same importance as regards the level of organization and, consequently, the balance coefficient (z_i) was considered equal to the unit.

b) The relation entropy is approximated by using as computing elements the stationary time for lack of work. Of course, this hypothesis causes to include in the calculation of entropy an additional element concerning the general conception on the method proposed by us, namely the possible planning errors which, obviously, from the point of view of the concept, do not measure the level of organization, but are part of the fundamental attributes of management.

This hypothesis was deliberately accepted because, as it is known, deficiencies in planning cause perturbations in organization and, in our machine-building enterprises, there are still many deficiencies of planning and of technical-material supply.

c) The entropy introduced by manpower was considered distinct, only from the point of view of the lower level of training of workers in relation to the complexity of products; thus, the whole scale of values including the waste of highly skilled work for carrying out lower level works, was not included in the calculation. The entropy introduced by manpower through the absence from production was also considered distinct.

d) The other components of technological entropy (the quality of the objects of work) were taken into consideration in a global expression, called the quality of fabrication.

On the basis of these hypotheses and as a result of processing of data, the following main results were obtained:*)

- the probability of interrupting the process for lack of work $P_{11} = 0.0989$
- the probability of interrupting the process for the lack of manpower $P_{12} = 0.0324$
- the probability of interrupting the process by damages and faults of the equipment $P_{13} = 0.1239$

The adherent entropies were calculated corresponding to each probability

$$H_{11} = 0.4658; \quad H_{12} = 0.2053; \quad H_{13} = 0.5407$$

The disorganization resulting from the interruption of the proces of production is $H_1 = 1.2118$. The maximum value of this entropy (the case of maximum disorganization) — within the limits of the plausibly real values $P_i = 0...0.5$ (see page 13) — corresponds to the case $P_i = 0.5$ and represents the value $H_1 = 3$.

Obviously, to reflect the level of organization the above-calculated entropy must be compared to a standard.

From examining the situation in several machine-building enterprises, the author has come to the conclusion that at present, the following levels of standard entropy might be considered as *normal*:

a) The entropy resulting from the lack of supply of the place of work $H_{11}^0 = 0.10...0.3$

the minimum limit being specific to the serial and mass industries and the maximum limits to the industries of unique pieces.

*) These and the following data are conventional.

b) The entropy resulting from the ack of manpower $H_{12}^0 = 0.10,...,0.20$

the minimum limit being specific of work in three shifts and, the maximum limit, accepting work in two shifts, for part of the places of work.

c) The entropy due to technological faults $H_{13}^0 = 0.10,...,0.3$

including the necessity of accidental interruptions, the minimum limit being specific to the complex installations and aggregate machines and, the maximum limit-to classical equipment with a higher level of wear.

Under these conditions, the entropy of admissible interruption of the process of production is placed within the limits $H_1^0 = 0.3,...,0.8$.

For the examined case, it results that the safety level in the unfolding of the process is:

$$g_1 = \frac{0.3}{1.2118} \approx 0.25 \text{ the most pessimistic solution;}$$

$$g_2 = \frac{0.8}{1.2118} \approx 0.67 \text{ the most optimistic solution.}$$

As can be seen, the level of organization in this case is relatively lowt. Of course, it considerably depends on the size of the standard which, as if was shown, was approximated by the author, without having the certitude of definitive values. At the same time, it is decisively influenced by the fact that the system proposed for analysis is under organization. We consider that to the extent to which specialists will find interesting the method formulated by us, standard tables can be built, which should be successfully used in calculating the organizational entropy and, consequently, the level of organization.

Another aspect which was tackled in the example chosen was the entropy estimating the quality of fabrication.

The probability of calculated reject was found $P_4 = 0.00403$, generating an entropy $H_4 = 0.006218$.*)

It is noticed that the values are very low, thus the total entropy would be $H_{\text{plant}} = H_1 + H_4 = 1.218008$, which does not change the previous conclusions in connection with the results obtained.

2.3.2. *Example of comparability of the level of organization among various machine-building plants*

Another application tried by the author in connection with the method of analysing the entropic conditions has taken into consideration the comparability among various cybernetic-industrial systems. It is known that,

*) Indices P_4 and H_4 were used to preserve the notations in the previously described methodology.

generally, comparability in industry just as in the entire economy, is usually based on the method of measuring the values of any kind of activities. At a careful analysis, it can be affirmed that this criterion of comparability measures, in fact, only the inputs and outputs from the respective cybernetic sets, without offering the possibility of knowing the functioning of each subsystem and, especially, of the degree in which the component systems of the set participate in "the finalization of the proposed aim". In the technical systems, the problem of the methods of investigation inside the system is much more developed. The technician is measuring flows, pressure, temperatures, vibrations, powers, intensities, etc. inside the technical systems and he thus can ensure a permanent guidance and functioning with an ever higher efficiency. The same thing would happen had we convenient methods and techniques of analysis also in the case of the cybernetic-industrial systems.

In our opinion, cybernetics is the science offering such techniques. Defined by Wiener as the science of communication and control with beings and machines, of course, at the beginning this science concerned the analogies existing between the technical and biological systems. In our study, setting out from the theoretical problems described in the first part, we were preoccupied to extend the analcgy to the cybernetic-economic systems.

For the time being, the studies made are in the phase of analysis of the participation of the cybernetic-industrial systems in the functioning of cybernetic sets to which they belong through a notion introduced by the author, namely "the level of organization".

To this purpose, a set of five units was chosen $S = \sum_{i=1}^{i=5} S_i$ simulating part of the machine-building branch. Within each unit, a number of 4 to 12 characteristic subsystems was maintained, as follows:

$$S_1 = \bigcup_{j=1}^{j=5} S_{1j}; \quad S_2 = \bigcup_{j=1}^{j=4} S_{2j};$$

$$S_3 = \bigcup_{j=1}^{j=4} S_{3j}; \quad S_4 = \bigcup_{j=1}^{j=10} S_{4j}; \quad S_5 = \bigcup_{j=1}^{j=12} S_{5j};$$

For example, at system S_1 (representing the "Timpuri Noi" Works in Bucharest) were chosen S_{11} — rod D_{110}, S_{12} — crank shaft LDE, S_{13} — curtain rod K5645-113, S_{14} — crank shaft C 300-21 and S_{15} — crank shaft K5645-9c.

The building of the above mentioned sets was made, of course, according to a simplifying hypothesis, namely that the number of chosen subsystems defines the entire activity of the respective plant. This hypothesis was made deliberately, for two reasons, namely, firstly: the taking into consideration of all systems (objects of work or fabrication processes) would require rather big volume of work; secondly: it is advisable to operate, in practice, with representative standards, because it is known that, as a rule the level of organization of production with long fabrication cycles influences the interconnections between all the other systems. Data were extracted in connection with each system, on the effective time of work on the object of

work and on the total length of expectation in the process, of fabrication according to table 1.

Table 1

Basic Data

Component systems (S_i) (S_{ij})	Effective work time (hours/piece) te_{ij}	Duration of fabrication cycle (hours/piece) tc_{ij}	Probability of normal development of the process P_{ij}	Probability of interruption $1 - P_{ij}$
1	2	3	4	5
S_{11}	5.48	250	0.0219	0.9781
S_{12}	52.60	293	0.1795	0.8205
S_{13}	3.06	266	0.0115	0.9885
S_{14}	5.38	464	0.0116	0.9884
S_{15}	5.20	224	0.0232	0.9768
S_{21}	46	246	0.1870	0.8130
S_{22}	60	200	0.30	0.70
S_{23}	30	70	0.4286	0.5714
S_{24}	106	166	0.6385	0.3615
S_{31}	112	280	0.40	0.60
S_{32}	232	483	0.4803	0.5197
S_{33}	206	457	0.4508	0.5492
S_{34}	26	62	0.4194	0.5806
S_{41}	496	4536	0.1093	0.8907
S_{42}	428	2408	0.1777	0.8223
S_{43}	556	3316	0.1677	0.8323
S_{44}	488	5348	0.0912	0.9088
S_{45}	180	3780	0.0476	0.9524
S_{46}	496	3904	0.1270	0.8730
S_{47}	428	2468	0.1734	0.8266
S_{48}	556	2138	0.26	0.74
S_{49}	488	2636	0.1851	0.8149
S_{410}	180	5104	0.0353	0.9647
S_{51}	14.54	99	0.1469	0.8531
S_{52}	18.76	79	0.2375	0.7625
S_{53}	44.06	344	0.1281	0.8719
S_{54}	13.56	158	0.0858	0.9142
S_{55}	191.10	911	0.2098	0.7902
S_{56}	21.50	70	0.3071	0.6929
S_{57}	17.60	78	0.2256	0.7744
S_{58}	102.06	186	0.5487	0.4513
S_{59}	55	127	0.4331	0.5669
S_{510}	47.74	112	0.4262	0.5738
S_{611}	46.94	111	0.4229	0.5771
S_{512}	22.20	82	0.2707	0.7293

As can be seen, in table 1 the data extracted directly from the primary documentation are those comprised in columns 2 and 3. The data in columns 4 and 5 are resultants. The signify two probable events: first — the process is developing uninterruptedly $p_{ij} = \frac{te_{ij}}{tc_{ij}}$ and second — the process is un-

folding with probable interruptions, equivalent to$(1 - p_{ij})$. This helps us to calculate the entropy of each system $H_{ij} = - p_{ij} - (1 - p_{ij}) \log (1 - p_{ij})$.

Columns 4 and 5 thus represent the first elements necessary for calculating the entropy.

Had each system S_{ij} the same importance in the proper unfolding of the process of fabrication of system S_i, the calculation of entropy H_{ij} would result immediately and the value H_i would result as the sum of the entropies of each system, thus

$$H_i = \sum_{j=1}^{j=n} H_{ij}.$$

As it was previously demonstrated, the fabrication systems, considered as cybernetic systems, do not appear in the process as equi-important; consequently, a coefficient α_{ij} must be determined in order to signify the importance of each system S_{ij} in the system S_i to which it belongs; at the same time, coefficients α_i should be introduced for establishing the importance of the systems S_i within the set S.

On this basis, one can proceed to the calculation of the values of entropies H_{ij} and to the calculation of entropy H_i. It is pointed out that the data in the previous table and the data presented before have a conventional character; the perturbations introduced by the author were achieved in such a way that they do not essentially change the conclusions which would have been reached had real data been used.*)

Following the calculations made the sizes of entropy given in table 2 have resulted.

Table 2

System	ΣH_{ij} Entropy of systems S_{ij}	$\Sigma H_{ij} \cdot \alpha_{ij}$ (where α_{ij} is the importance coefficient of system S_{ij})
S_1	0.35250	0.121785
S_2	1.05526	0.2531970
S_3	1.18730	0.297067
S_4	1.65044	0.1762631
S_5	2.88593	0.2443440

The values of the entropy for the analysed systems $S_1, ..., S_5$ once determined, it is possible to determine the level of organization of each system and, on this basis, the level of organization of the whole ensemble. For this, we shall have to attribute probabilities of interruptions and of carriyng out of work in best conditions. Consequently, a standard entropy H_{i_0} for each system is calculated. From certain data existing in our industry and from va-

*) The calculations were carried out at the Economic Cybernetics Department of the Academy of Economic Studies (Georgia Hera, Cătălin Arsene, Radu Stroe to whom the author brings his sincere thanks).

rious world statistics it was considered that the optimum levels comprised in table 3 can be used.

Table 3

Levels of random entropy

System S_i	Probability of normal development p_i	Probability of interruption $1 - p_i$	Standard entropy H_{i0}	Balance coefficient of system S_i $\alpha_i(S_i)$
S_1	0.95	0.05	0.0862175	0.10
S_2	0.85	0.15	0.183579	0.15
S_3	0.80	0.20	0.217322	0.20
S_4	0.88	0.12	0.0862175	0.25
S_5	0.80	0.20	0.217322	0.30
Total entropy	—	—	0.16637397	100

Comparing the optimum levels to the real entropies, we shall notice that the levels of organization of each system are:

$$G_1 = \frac{H_{10}}{H_1} = 0.71; \quad G_2 = \frac{H_{20}}{H_2} = 0.72; \quad G_3 = \frac{H_{30}}{H_3} = 0.73;$$

$$G_4 = \frac{H_{40}}{H_4} = 0.49; \quad G_5 = \frac{H_{50}}{H_5} = 0.88.$$

If we want to know the level of organization of the entire system S, that is of the adherent part of the machine-building industry simulated by the set $S = \sum_{i=1}^{i=5} S_i$, we shall balance each level of organization with the coefficients α_i, thus:

$$G(S) = \frac{\sum_{i=1}^{i=5} G_i \cdot \alpha_i}{\sum_{i=1}^{i=5} G_i \alpha_i} = 0.7375.$$

As can be seen, system S_5 has the maximum level of organization. At the same time, the entropy of the branch, calculated as the sum of the entropies of the component systems has quite a high level. Accordingly, the level of organization of the simulated set is relatively low. It should be underlined that the results obtained have only an exemplifying character.

CONCLUSIONS

The examples were chosen in such a way as to be able to demonstrate the applicability of the method and its utility. As regards applicability, it can be noticed that the method does not raise special difficulties. The first

part, linked with the setting up the data file can be achieved by personnel with secondary training and the data can be easily extracted from the existing primary records keeping system. It should also be mentioned that the respective data are retrieved also in the files drawn up in view of setting up administration systems with the aid of the electronic computer. Thus, the applicative programme decks for the IBM and IRIS computers, from the check made by the author, may generate nearly the totality of necessary data. We should add only the data determining the correlation between the level of training of workers and the complexity of the pieces. But, as it was pointed out, if one operates with global systems (the whole fabrication process of a piece) the entropy introduced by manpower is being implicitely taken into consideration. Consequently, the method does not imply special efforts for the collection of primary data.

Its most delicate part-and which requires high technical experience, indeed-is the establishment of the balancing coefficients (α_i) for each system as well as the building of the standard system (with entropy H_0).

It is considered, however, that in the event of the appropriation of the method, specialists of the research and designing institutes in various branches could draw up tables and computing nomogrammes, which would render this method applicable in mass proportions.

From this point of view, it should be mentioned that many ways of establishing the computing nomograms can be imagined. The author has used for the balancing coefficients (α_i) the method of operational synchronizing in relation to the product with a maximum fabrication cycle. The importance of the order of subensembles in the assemblage could also be taken into consideration. For example, at a mud pump for the oil industry, if the maximum index were attributed to the frame-work, indices in the order of their importance would be attributed to the other subensembles. The size of the index can be given in percentages so that their sum should be equal to 1, or may have another value. In this case, a sum of indices of the standard equal to the indices of the analysed system should be ensured.

For the size of the standard entropy, the author has used the existing criteria of classification of the fabrication systems. It has been considered that the discontinuity probability of the process is minimum at mass fabrication and maximum at individual fabrication. At transfer lines, for example, it was considered that transport time is the $\frac{1}{15}-\frac{1}{20}$ of the fabrication tact. This means that the level of entropy can be calculated immediately, in optimum conditions.

It results from these observations that practically, there are no impediments in the application of the method. An exhaustive approach in the analysis of any system and the use of simplifying hypotheses which do not introduce a level of a too high error are also possible. Thus, the only problem left is the extent to which the method of the analysis of entropic conditions has or not practical advantages. In the author's opinion, either this method will be applied in the form elaborated in the present work or ammendments will be brought to it, it has great advantages for modern management.

Firstly, it is among the few methods allowing the measuring of the level of organization of the cybernetic-economic systems and accordingly, the outlin-

ing of resources which cannot be emphasized in another way. This is of very great importance even in the planning activity, because a more uniform solicitation might be achieved.

Secondly, the new method allows the comparability between different systems (we can compare a bread factory to an electric-power station or to a machine-building enterprise). It should be mentioned that the other methods of value comparability, for example -allowed the unitary measuring of the effects of different systems, but, in no case did they allow the simultaneous measuring of the potentialities of the productive units and their real capacities linked with the internal structure of the respective systems.

Although other advantages could also be enumerated, for the time being, we confine ourselves to awaiting the reaction aroused by the proposed method among specialists-any critical remark or improvement being of a nature to bring us only satisfaction and the joy that it has aroused interest.

REFERENCES

1. BĂLĂCEANU C., NICOLAU E: *Les fondements cybérnétiques de l'activité nerveuse.* Ed. Monographies du collège de medicine des hopitaux de Paris, 1971.
2. BEER STAFFORD: *The Cybernetics Cytohlast: management itself.* Progress of Cybernetics. Gordon and Breach Science Publishers, London, 1969.
3. BOULANGER GEORGES, R.: *Artificial Intelligence.* Progress of Cybernetics, Gordon and Breach Science Publishers, page 3—9.
4. EGTEN VAN R., J: *Noţiunea de comportament în cibernetică şi problema echivocului semantic.* (The Notion of Behaviour in Cybernetics and the Problem of Semantic Ambiguity). Documents of the International Congress of Cybernetics, Namur, 1969.
5. ENE HARALAMBIE : *Teoria reglării sistemelor sociale.* (The Theory of Adjusting the Social Systems), Ed. Academiei R.S. România, 1972.
6. GEORGESCU ROEGEN NICHOLAS: *Analytical Economics.* Harvard University, Cambridge, Massachusetts, 1966.
7. GUIAŞU SILVIU: *Aplicaţii ale teoriei informaţiei.* (Applications of the Theory of Information), Ed. Academiei R.S. România, Bucharest 1968.
8. IBRAGHIMOV I., S.,: *Cibernetica şi sisteme de comandă.* (Cybernetics and Control Systems). Papers presented at the 12th conference of young scientists and post-graduates of the Institute of Automatics and Telemechanics, 1965, I.D.T. 1970.
9. KOBRINSKI N., E.: *Bazele ciberneticii economice.* (The Basis of Economic Cybernetics). Ed. Ekonomika Moscow, 1969.
10. LANGE OSCAR: *Introducere in cibernetica economică.* (Introduction to Economic Cybernetics). Ed. ştiinţifică, Bucharest, 1967.
11. MĂNESCU MANEA: *Preocupări cu privire la tehnica de elaborare a modelelor ciberneticii in economie.* (Preoccupations in the Technics of Elaborating the Models of Cybernetics in Economy). Revoluţia ştiinţifică şi tehnică contemporană. Ed. politică, Bucharest, 1968.
12. NEGOIŢĂ C., V.: *Sisteme de înmagazinare şi regăsire a informaţiilor.* (Information Storage and Retrieval Systems), Ed. Academiei R.S. România, 1970.
13. NICOLAU EDMOND, POPOVICI ALEXANDRU: *Introducere in cibernetica sistemelor discrete.* (Introduction to the Cybernetics of Discrete Systems), Ed. tehnică, Bucharest, 1966.
14. NICOLAU EDMOND, POPOVICI ALEXANDRU: *Introducere in cibernetica sistemelor continui.* (Introduction to the Cybernetics of Continuous Systems), Ed. tehnică, Bucharest, 1972.

15. PAPADACHE I: *Automatica aplicată.* (Applied Automatics), Ed. tehnică, Bucharest, 1971
16. POPOV V., M.: *Hiperstabilitatea sistemelor automate.* (The Hyperstability of Automatic Systems), Ed. Academiei R.S. România, Bucharest, 1966.
17. PORTER B.: *Stability Characteristics of a Class of Multilevel Dynamical System.* Kybernetes, vol. 1, Jan. 1972. Ed. Gordon and Breach Science Publishers, London, New York, Paris.
18. SAVANT C., J.; *Calculul sistemelor automate.* (The Calculation of Automatic Systems), Ed. tehnică, Bucharest, 1967.
19. SCHULTZ D., GIBSON J., E.: *The Variable Gradient Method for Generating Liapunov Functions,* AIEE, ITG on Autom, Control, 1(4), 1963. pages 23—32.
20. SHANNON CLAUDE: *A Mathematical Theory of Communication Bell System.* Technical Journal, 1948, pages 379—423; 622—656.
21. SULTAN PAUL: *The Impact of the Union,* Labor, Economics Henry Holt and Company, New York, 1959.
22. TRUXAL J., C.: *Automatic Feedback Control System Synthesis.* Mc. Graw Hill Book Company, New York, 1955.
23. ZADEH L., A.: *On the Stability of Linear Varying Parameter Systems.* Appl. Phys., vol. 22, 1951.

L'ANALYSE DES ÉTATS ENTROPIQUES — UNE NOUVELLE METHODE D'INVESTIGATION DES SYSTEMES CYBERNETIQUES — INDUSTRIELS (II)

Faisant suite à son travail sur les états entropiques, l'auteur présente une méthode d'investigation des systèmes cybernétiques industriels tant pour les états entropiques des systèmes continus que pour ceux relevant des systèmes discrets.

Après la présentation théorique de la méthodologie de travail concernant l'utilisation de la méthode de l'analyse des états entropiques, il y est donné un exemple pratique du cadre de certaines entreprises industrielles. Finalement, des appréciations sont faites sur l'efficacité de la méthode proposée.

АНАЛИЗ ЭНТРОПИЧЕСКИХ СОСТОЯНИЙ — НОВЫЙ МЕТОД ИССЛЕДОВАНИЯ КИБЕРНЕТИКО-ПРОМЫШЛЕННЫХ СИСТЕМ (II)

В продолжение статьи об энтропических состояниях автор приводит метод изучения кибернетико-промышленных систем как для энтропических состояний непрерывных систем, так и для энтропических состояний дискретных систем.

После теоретического изложения рабочей методики применения метода анализа энтропических состояний приводится практический пример в рамках промышленных предприятий. В заключение дается оценка эффективности предлагаемого метода.