L. TÖVISSI
Department of Economic Cybernetics
Academy of Economic Studies

A Systemic Conception of Input-Output Models

A system of input-output linear models is presented allowing the synthesis (or decomposition) at the level of any link of social production management. This analysis on the vertical of the management system blends with the county territorial models. A unitary recording, on the whole of economy, of transactions at the level of productive units is proposed. Then, by using a system of aggregation algorithms, the input-output model for the desired link of management is obtained.

It is recommended that this system might represent the information basis of a hierarchical and optimizing management system.

One of the major values of the input-output balance is the systemic way in which it approaches material production considering it as a unitary and organic ensemble of the economic branches. This allows to reveal the structure of the system and the dependence, respectively the interdependence between its subsystems. Both in economic research and practice, the systemic approach is not only necessary but the only adequate one. Indeed, as academician, professor Manea Mănescu points out "economy — from enterprise to its ensemble-appears as an extremely complex system" [1].

The input-output balance presents in a correlated and equilibrated table the annual circuit of the sphere of material production, the inter-branch economic flows, the way of attracting into the circuit the resources outside this circuit, the formation and distribution of the resources created in one year. All these processes are described, under various aspects, by a system of equalities for which the values of the exogeneous variables can always be established, on the basis of exact statistics or calculations, so that the values of the endogeneous variables should result alone. In this way, important correlations, proportions, conditions of equilibrium, structures and processes

of the social production system can be modelled in a really simplified form, excluding a number of essential and restrictive problems of "the economic environment".

The systemic character of the model facilitates the application of the technique of systemic analysis, namely: the decomposition of the system into partial subsystems and the synthesis in subsystems of the integrate system. The application of these techniques might complete the economic analysis in new directions, such as: the approaching of the economic system as an ensemble of the partial subsystems; the thorough study of the dependence-interdependence — between the whole and the parts, between the component subsystems between subsystems and "the rest of the economic environment"; the deepening of the analysis of the mutual economic connections between the identified subsystems, etc.

The decomposition of the economic system into subsystems is made easily when a decomposable technological matrix A corresponds to the model. Being demonstrated on the basis of statistics that the real input-output table is not decomposable, the cases of approximately triangulate tables or approximate to the quasitriangulate form [2], as limits of approximation of the real tables, are of special interest.

In analysing the non-decomposable input-output models, an important step was made by W. Leontief [3], in 1965. Setting out from the triangulate table of the United States for 1958, W. Leontief outlined the place occupied by the big transactions, important for the outlook of these in charge of the sales activity, especially for forecast and planning. The analyist's attention being focussed on such "limitations" of flows and "attraction force" of interdependence allows to identify the order of priorities and of the succession of approach. The approach on blocks reduces the ampleness of the system to the level of subsystems.

In the decomposition on blocks, some typical schemes can be followed through which a number of concrete cases can be generalized. Thus, a more precisely defined approach presents the case in which the national economy is divided into two subsystems [4, pp. 214—221]: the block put in the centre of attention and all the other subbranches. The subsystem may be a branch of the initial balance, developed and detailed by taking into consideration the component subbranches or it may be a set of branches forming a united production complex.

In these conditions, the technological matrix is written as a block matrix:

$$A_B = \begin{pmatrix} A_{11} & A_{12} \\ A_{21} & A_{22} \end{pmatrix}.$$

Connections thus appear between the branches of the subsystem (characterized by the block A_{11}), between the branches of the other part of the national economy (characterized by the block A_{22}), as well as direct (block A_{12}) and indirect (block A_{21}) relations between the subsystem and the rest of the branches.

In a table, formed on the hierarchical system, of interbranch connections, it is supposed that there exist also complex branches which correspond to certain processes of complete processing and which concentrate the funda-

mental part of the direct flows and also of the indirect connections. Thus, the coefficients of integral expenses calculated on subsystems $B_{11} = (I - A_{11})^{-1}$ and $B_{22} = (I - A_{22})^{-1}$ approach the coefficients of integral expenses at the level of the entire economy. The approach will certainly occur in the event of extending the limits of the subsystems.

The coefficients determined at the level of subsystems can be used for calculating the balance and correlation of the plan targets. In case that a subsystem corresponds to the economic branches coordinated by a ministry, with the method presented, the processes of production and of production marketing at this level can be modelled.

The inverse of matrix $(I - A_B)$

$$B = (I - A_B)^{-1} = \begin{pmatrix} B_{11} & B_{12} \\ B_{21} & B_{22} \end{pmatrix}$$

has some interesting properties. Thus, some connections can be easily established in which the blocks of the inverse matrix B_{11}, B_{12}, B_{21} and B_{22} are expressed according to the inverse $(I-A_{11})^{-1}$ of the considered subsystem [4]. Namely, the interdependences within "the rest" and those between the subsystem and "the rest" can be expressed in such a way that the description of the direct and indirect connections of the branches of the considered subsystem should appear in their expressions. Thus, the existing techniques allow the analysis of the dependences and interdependences within the subsystem and, at the same time, its linking to the whole.

The "rest" of the branches can be approached in a different way, not only as a system of branches, but also as a single aggregate branch. In this way, a considerable quantity of information is lost, but the calculations become simpler. Attention is focussed on the detached subsystem and the position "other branches" plays a technical role, that to ensure the balancing of the wholes on the economy.

Consider the subsystem made up of c branches. The vector of the total production X_c and the vector of the final production Y_c are defined for it. The other branches unite into a single r for which x_r and y_r represent the total production, respectively the final production and a_{rr} the coefficient of self-consumption. Another two vectors result: a_{cr} — the column vector of the consumption coefficients in the production of the subsystem made in branch r and a_{rc} — the line vector of the expense coefficients of the source r for the production of the subsystem.

The entire system, is described as:

$$\begin{pmatrix} X_c \\ x_r \end{pmatrix} = \begin{pmatrix} A_{cc} & a_{cr} \\ a_{rc} & a_{rr} \end{pmatrix} \begin{pmatrix} X_c \\ x_r \end{pmatrix} + \begin{pmatrix} Y_c \\ y_r \end{pmatrix}.$$

All complex branches of the national economy can be "run" according to this method as some independent subsystems, in relation to which branch r fulfils a sort of "bordering" role.

All this shows the possibilities of deepening the analysis and calculations on the position of a certain economic subsystem within the whole. Such subsystems may appear in keeping with the importance of the objectives of

economic policy. The analysis of the place held by the energy producing subsystem of the economy (fuel, electric power, etc.) has always been topical, especially today. Of an equally important interest is the study of the subsystem turning out production tools from the point of view of its potential for the economic-social progress. The position of the metal producing branches, of the chemical industry, of the branches producing consumer goods or only of those producing foodstaffs, etc. might be analysed.

The complete analysis and synthesis of the input-output models "on the vertical" of social production require a real aggregate graded hierarchy of the models beginning with the model of an enterprise, continuing with the model of a group (complex, plant), then the model of a subbranch and branch (or the model on the ministry in the event of modelling on organizational structures) and, finally, the model of ensemble on the economy. The passing from one level to another is made through an optimized aggregation operation. The successive amalgamation of the positions in the classifications of activities and service-products ensures the efficiency of the model at a management level, respectively. The unity of the vertical system of input-output models is ensured especially through the unitary solving of the method of drawing up the balances at all levels. The practical solutions will certainly bring about concrete elaborations and specifications as regards the efficient solution.

With the maturation of the economy and with the large application in economic management of the principles of democratic centralism, the analysis and synthesis, on a horizontal line, of the balance of inter-branch connections throughout the territory are of ever greater importance . Indeed, the balance elaborated on a county level reflects the entire material production throughout the territory and allows, in the first stage, the equilibration of the component subsystems, in the next stage, serving as a basis for optimizing calculations.

The list of the positions of the balance on the county, being adapted to the local characteristics, usually differs from that of the entire economy. Practical needs require a thorough detailing, a list of activities ever closer to the list of the main products throughout the territory.

The treatment of "the rest", which in this case is complex : the rest of the counties and the rest of the locally inexistent branches, raises new problems as well . There are also methods for a simple treatment. For example, the balance of the counties is brought to the structure and list of the entire economy and the synthesis of the tables partial in essence is reduced to an operation of "depth totalling" of the superposed county balances. Thus, the vector of the total production X^k and the vector of the final production Y^k, as well as the matrix of flows $X^{kk}(x_{ij}^{kk})$, (where $k = 1, 2, ..., p$ on counties) are brought to the same dimension as the dimension on the whole of the economy, the inexistent branch in the county appearing in the matrix with null elements and the branches previously disintegrated at a county level reintegrate according to the general methodological principle.

The entire national economy can be presented as an integrate system made up of county subsystems.

Generally, the production of a county X^k is made up of its own productive consumption x_{ij}^{kk}, the deliveries for the productive consumption of the other counties $x_{ij}^{kl}(1, k = 1, 2, ..., p; 1 \neq k)$

and the final production delivered outside the economic system Y^k. Each county receives resources from outside the system I^k (import from abroad, primary resources). The matrix of the inter-county flows represents the starting basis in the analysis and planning calculations:

$$\begin{pmatrix} X^{11} & X^{12} \dots & X^{1p} \\ X^{21} & X^{22} \dots & X^{2p} \\ \vdots & & \\ X^{p1} & X^{p2} \dots & X^{pp} \end{pmatrix}.$$

A technological matrix can be calculated for each county

$$A^{kk} = (a_{ij}^{kk}), \quad \text{where} \quad a_{ij}^{kk} = \frac{x_{ij}^{kk}}{x_j^k}, \quad (i, j = 1, 2, \dots, n),$$

on the basis of which the inter-branch connections of production in the county can be analysed and calculations of equilibration and coordination can be made both within the county and with the "rest" of the national economy.

The connection between one county and the other counties is characterized with the flow matrix $X^{kl} = (x_{ij}^{kl})$, where $k, l = 1, 2, \dots p$ counties and $k \neq l$. Obviously, all matrices will have to have the same size for all counties. Otherwise, the comparability and unity of the treatment are not ensured. Two solutions seem reasonable, one of which is chosen in keeping with the aim pursued: 1) the classification of branches used for the entire economy is applied in each county (in this case, the production structures corresponding to territorial specialization cannot be characterized in profondity nor the concrete relations of inter-county cooperation) and 2) the "maximal" classification on branches is adopted unitarily, resulting form combinirg the detailed classifications of the counties, which are applied afterwards both in the global model and in all partial models.

The problem of the way of treatment of imports from abroad is put also in the case of the "vertical" system of balances, but, it seems to be more acute in the case of the territorial system. For well known reasons, upon determining the input coefficients, imports must appear there where production consumption takes place.

Reasons, of a practical character, are of course decisive for concrete methodological options.

In case of permanent and lasting connections of cooperation between counties k and l one may calculate the matrix of the input coefficients in county l from county k, $A^{kl} = (a_{ij}^{kl})$,
where

$$a_{ij}^{kl} = \frac{x_{ij}^{kl}}{x_j^l}, \quad (k \neq l; \quad k, l = 1, 2, \dots, p).$$

For each distributing county k as many such matrices result to as many counties it delivers production for a productive purpose; similarly for the respective county as many matrices can be built $A^{hk} = (a_{ij}^{hk})$ from as many counties $h = 1, 2, \dots, p$ it takes supply.

The complete table of the matrices of county and inter-county connections

$$\begin{pmatrix} A^{11} & A^{12} & \dots & A^{1p} \\ A^{21} & A^{22} & \dots & A^{2p} \\ \vdots & \vdots & & \vdots \\ A^{p1} & A^{p2} & \dots & A^{pp} \end{pmatrix}$$

reveals the whole complexity of the production connections within and between the counties of the country.

The integration of the county balances into the all-country balance is facilitated by the fact that the structure and list of the branches for all counties had previously been unified.

At a microeconomic level, the technological matrix of expenses (or consumptions) incorporates, regardless of source, all expenses (consumptions). Accordingly, the consumption from the production of the county X^{kk} and consumption from the production of all other counties $X^{1k}, X^{2k}, \dots, X^{hk}, \dots, X^{pk}$ interest at a county level. Thus, it is necessary to determine matrix

$$X^{*k} = \sum_{h=1}^{p} X^{hk}$$

by totalling all matrices in the column of the consuming county k. Thus, a matrix of the integral flows of the productively consumed products results in the end:

$$(X^{*1}, X^{*2}, \dots, X^{*k}, \dots, X^{*p}).$$

The matrix of the input coefficients A^{*k}, made up of elements

$$a_{ij}^{*k} = \frac{x_{ij}^{*k}}{X^k}, \quad (i, j = 1, 2, \dots, n; k = 1, 2, \dots, p)$$

characterizes the direct expenses within each county to turn out — according to "the fabrication recipe of its own" — the total production. These coefficients reflect all productive expenses, regardless of source, made in the respective county, in contradistinction to the coefficients (a_{ij}^{kk}) limited to the consumptions made from the production deriving from the respective territory.

The last stage of the synthesis consists in passing to the matrix of flows (x_{ij}) and to the matrix of the input coefficients A for the entire economy.

The synthesis in the way described is achieved through the previous integration of the input-output balances on counties into the structure of the general model.

Various treatments of the analysis and synthesis of the territorial balances are largely dealt with in the economic literature. The territorial models of A. Fajferek, W. Leontief, V. Isard and L. N. Moses are analysed by way of comparison in [5]. We have analysed [6], and besides, W. Krelle's inter-regional model. An increased knowledge brought by these models clearly result from all studies made so far. We refer to a number of economic analyses which can be made on their basis, such as:the analysis of the struc-

ture on branches of the production of the counties, the possibility for the correlated determining, with other indices, of the elements of the newly created value within the county, the degree of attracting into the economic circuit the material, human and financial resources existing on a local plane, the characterization of the degree of dependence and interdependence of the economy of the county (or only of its various branches) on other counties or on the foreign market, etc. Under conditions of complete and correlated information, various calculations can also be made for substantiating the plan or strategic decisions of economic policy, such as: the correlation between the volume and structure of productive and unproductive consumption on counties, the direct and especially indirect effects of the location of objectives of productive investment in various counties, the correlation of the plans of development on a territorial plane, the finding out of the disproportions or narrow places in the county's economy, the elaboration of various plan variants in keeping with the variation of the components of the vector of final demand, etc. The putting into practice is conditioned on the existence of adequate data on a county plane, especially on the existence of the input-output balances of the counties.

If the requirements of social-economic management will lead to the generalization of the county balances, a flexible system which would "mould" faithfully enough the entire structure of the process of creating and using the social product (total, gross and net) might result from the combination of the various stages of the balances "on a vertical" and "horizontal" line. It seems that to meet with the needs of the present stage, a system of models in the form of a coherent system of input-output balances might be most easily achieved. Not only, treatment, decomposition and analysis, the carrying out of various calculations are facilitated through the linear character of the connections, but their informational basis can be ensured in quite a simple way.

All types of input-output balances can be part of a unitary system. The character of a system of construction is ensured by the unity of conception and methodology of solutions.

The observation units, in keeping with the accepted principle of elaboration ("organizational" branches or branches as "clear" as possible) can be the real economic units (sections, enterprises etc.) or/and the technological units specially defined on the basis of criteria of homogeneity.

The volume of transactions x_{uz} between the producing (source) unit u and the consuming (destination) unit z is registered as basic information.

The requirements of synthesis and analysis within the system impose a single classification and coding on the economy of the units, so that they correspond to the hierarchical stages of organization of material production (groups, trusts, ministries, branches, etc.) and the distribution of the units on the territory.

Subsystems, sub-subsystems of balances which are subordinate to higher systems (subsystems, etc.) can be generated at the level of each stage.

Transactions are naturally established according to the rules of double recording. The data in "the counts" are afterwards synthetized on the basis of aggregation algorithms (AL) establishing the rules of incorporating the transactions and of "merging" the activities (branches). Transactions ${}_{v}x_{ij}$ aggregated at the level $v = 0,1, \ldots, S$ result from the application on the vertical of the algorithms. Index v of the flow from branch i to branch j

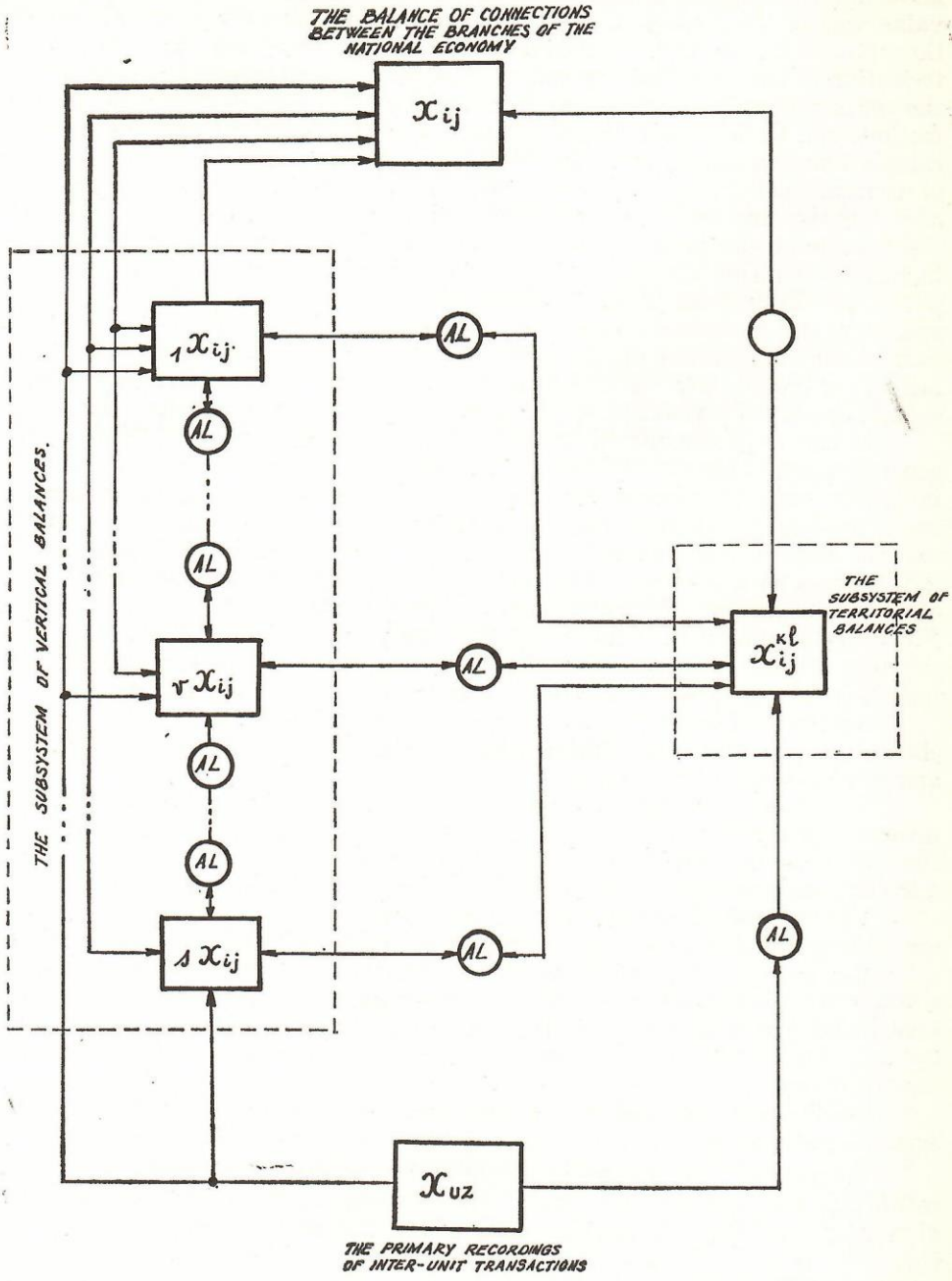
THE BALANCE OF CONNECTIONS BETWEEN THE BRANCHES OF THE NATIONAL ECONOMY
x_{ij}
THE SUBSYSTEM OF VERTICAL BALANCES.
$_1x_{ij}$
AL
$_rx_{ij}$
$_sx_{ij}$
THE SUBSYSTEM OF TERRITORIAL BALANCES
x_{ij}^{kl}
x_{uz}
THE PRIMARY RECORDINGS OF INTER-UNIT TRANSACTIONS

Fig. 1

shows the hierarchical stage of the organization of production. Stage $v = o$ is the highest, that of the national economy, and stage $v = s$ is the lowest, corresponding-through aggregation steps — to the primary transactions x_{uz}. The passing from a neighbouring or direct hierarchical stage to a more distant one is made by applying the adequate algorithm.

The territorial balances ordering flows x_{ij}^{kl}, index k specifying the county in which the producing branch i is situated and index l the county in which the consuming branch j is situated are achieved in a similar way.

The connection between the vertical and territorial balances is ensured also on the basis of specific algorithms of totalling and integration disintegration.

The positions in the classification of branches being coded according to hierarchical and territorial criteria, the application of the integration algorithms is easily automatized.

The storing of data on transactions is made in the corresponding compartments of the data banks system.

The whole system appears in the form of a block scheme (see figure 1).

Despite its cognitive value, the input-output method is only one of the ways of approaching the production system and though it has adequate qualities for representing it — it regards only some of its essential sides. That is why, the balance will have to be integrated into a system of economic-mathematical models capable of comprising the manysidedness of the economic phenomenon, the whole complexity of the connections to be found at its basis and of meeting with the tasks set in connection with the analysis, prognosis, planning and management of the national economy.

From among the many attempts made for the drawing up of a system of economic models, we mention: the standard system of the United Nations national accounts [7], the system of national bookkeeping in France [8] and the "FIFI I" model, the Cambridge (R. Stone) model, B. L. Isaev's integrate balances [9].

The qualities of a system of the input-output balance are turned to best account when passing from the static to the dynamic model [10]. In this case, the national economy is regarded as a complex dynamic system the growth of which is achieved by a process of cybernetic management and the input-output model is integrated into the close circuit of the management of this process [11]. In this light, two subsystems appear from the economy as a whole: the production of investment goods and the rest of branches. Both subsystems are optimized on the basis of partial and global optimum criteria. The harmonization is achieved by the control system by re-allocating the resources according to the requirements for bringing into harmony the partial optimum programmes with the global optimum.

CONCEPTION DES MODELES SOUS FORME DE SYSTEME

On ébauche un système de modèles linéaires entrée-sortie permettant la synthèse (ou la décomposition) au niveau de n'importe quel degré de la direction de la production sociale. Cette analyse sur la verticale du système de direction concorde avec les modèles territoriaux départementaux.

On propose pour toute l'économie un enregistrement unitaire des transactions au niveau des unités productives. Ensuite, utilisant un système d'algorithmes d'aggrégation, on obtient le modèle entrée-sortie pour le degré de direction envisagé.

On prévoit que ce système pourrait constituer la base informationnelle d'un système de direction hiérarchique optimal.

СИСТЕМНАЯ КОНЦЕПЦИЯ МОДЕЛЕЙ «ВХОДОВ-ВЫХОДОВ»

В настоящей статье обрисовывается система линейных моделей «входов-выходов», позволяющая производить синтез (или разложение) на уровне любого звена руководства социальными процессами. Этот анализ по вертикали системы руководства сочетается с уездными территориальными моделями.

Предлагается единая по всему народному хозяйству запись сделок на уровне производственных предприятий. Затем, при применении систем алгоритмов агрегирования, получается модель «входов-выходов» для желаемого звена руководства.

Указывается, что эта система могла бы представлять собой информационную базу иерархической и оптимизирующей системы руководства.

31.V.1974