N. RACOVEANU, Prof., Dr. eng.

A Theoretical Study of a Multiplier Based on the Variable Delay Line

This paper deals with the possibility of achieving an A-input & D-output multiplier by means of the simultaneous variation of pulses and propagation time through the line.

The fact is well known that the modelling of a series of physical phenomena may find its analogue correspondent in certain economic phenomena. Thus, the present paper, which approaches a problem regarding the study of the technical aspects of a transmission line, furnishes a series of relations which can be taken into consideration, for instance, when investigating problems connected with the economic information system.

If a pulse signal of frequency F_0 is applied at the input of a delay line, the number of pulses in the line is $t_0 F_0$, where t_0 is the propagation time of one pulse from the input to the output of the line.

In connection with the possibility to work out artificial electromagnetic lines of variable inductance (ferrite core coils) and of variable capacitance (diodes with $p - n$ junction), the problem arises, of using such a variable delayline to obtain a multiplier on the basis of the above-mentioned relation.

In the present paper the theoretical study of such a line is based on considering a line without leakage, as described by the equations:

$$\begin{cases} -\dfrac{\partial i}{\partial x} = \dfrac{\partial}{\partial t}(Cu) \\ -\dfrac{\partial u}{\partial x} = \dfrac{\partial}{\partial t}(Li) \end{cases} \tag{1}$$

$$\text{with } L(t) > 0,\ C(t) > 0,\ i(t, x),\quad u(t, x) \tag{2}$$

We introduce the notations

$$\begin{aligned} q &= Cu \\ \varphi &= Li \end{aligned} \tag{3}$$

and there results

$$\begin{cases} -\dfrac{\partial \varphi}{\partial x} = L\dfrac{\partial q}{\partial t} \\ -\dfrac{\partial q}{\partial x} = C\dfrac{\partial \varphi}{\partial t} \end{cases} \tag{4}$$

With a change of variables according to

$$\frac{d\tau}{dt} = \frac{1}{\sqrt{LC}} \tag{5}$$

the system becomes

$$\begin{aligned} -\frac{\partial \varphi}{\partial x} &= \rho \frac{\partial q}{\partial \tau} \\ -\frac{\partial q}{\partial x} &= \gamma \frac{\partial \varphi}{\partial \tau} \end{aligned} \tag{6}$$

with the notations

$$\gamma = \frac{1}{\rho} = \sqrt{\frac{C}{L}} \tag{7}$$

We are interested in the case ρ = constant. Relations (3) and (5) allow to show that the conditions are fulfilled in view of applying the Laplace transform, after which the solution is immediate:

$$\mathcal{L}\varphi = Ae^{-sx} + Be^{sx}$$

To determine the constants we introduce the conditions

$$\varphi(\tau, 0) = \varphi_0; \qquad \frac{\partial}{\partial x}[\varphi(\tau, x)]_{x=0} = \varphi_0^x$$

There results

$$\begin{aligned} \mathcal{L}\varphi_0 &= A + B \\ \mathcal{L}\varphi_0^x &= -sA + sB \end{aligned}$$

Hence

$$\mathcal{L}\varphi = \frac{s\mathcal{L}\varphi_0 - \mathcal{L}\varphi_0^x}{2s} e^{-sx} + \frac{s\mathcal{L}\varphi_0 + \mathcal{L}\varphi_0^x}{2s} e^{sx} \tag{8}$$

To eliminate the reflected wave it is required that

$$s\mathcal{L}\varphi_0 + \mathcal{L}\varphi_0^x = 0 \tag{9}$$

and the solution becomes

$$\mathcal{L}\varphi = e^{-sx}\mathcal{L}\varphi_0 \tag{10}$$

or

$$\varphi(\tau, x) = \varphi_0(\tau - x) \tag{11}$$

On the other hand, there results from (6)

$$-\frac{\mathrm{d}}{\mathrm{d}x}\mathcal{L}\varphi = \rho s \mathcal{L}q$$

Taking (10) into account we have

$$-\frac{\mathrm{d}}{\mathrm{d}x}\mathcal{L}\varphi = -se^{-sx}\mathcal{L}\varphi_0 = -s\mathcal{L}\varphi$$

from where

$$\mathcal{L}\varphi = \rho \mathcal{L}q \tag{12}$$

or

$$\varphi(\tau, x) = \rho q(\tau, x) \tag{13}$$

According to (3) there further results

$$i(t, x) = \gamma u(t, x) \tag{14}$$

Therefore the conclusions for a line ending on the characteristic impedance are also valid in the case where L and C are variable but ρ = constant.

The idea of the multiplier is the following:
a signal with frequency modulated pulses according to the variable y is introduced at the line input; the propagation speed of the line is amplitude modulated according to the variable z. For y and z constant, the number of pulses in the line is proportional to the product yz. In case y and z vary in time, the number of pulses in the line may be approximately proportional to the product yz. Our aim is to determine the conditions in which this approximation is satisfactory. To this end we study the simplest case, where y and z have a linear variation with time, considering that this results in a linear variation of the line parameters, and a linear variation of the input signal period. Hence

$$L = L_0(1 + \lambda t) = \rho^2 C \tag{15}$$

We assume that a Dirac pulse is aplied at the line input

$$i(\tau, 0) = Q_0\delta$$

At the distance x from the input a pulse appears, given by

$$i(\tau, x) = Q_0\delta(\tau - x)$$

Here $\delta(\tau - x)$ represents the Dirac measure in relation to τ and depending on the parameter x, so that the pulse appears at point
$\tau - x = 0$, or, taking (5) into account

$$\int_0^t \frac{\mathrm{d}t}{\sqrt{LC}} = x$$

or

$$\int_0^t \frac{\mathrm{d}t}{1+\lambda t} = L_0\gamma x$$

it follows

$$t_x = \frac{\exp(\lambda L_0 \gamma x) - 1}{\lambda}$$

by series development one obtains

$$t_x = L_0 \gamma x \left[1 + \frac{\lambda L_0 \gamma x}{2!} + \frac{(\gamma L^0 \gamma x)^2}{3!} + \cdots\right]$$

For $\lambda = 0$ and with a constant frequency input signal

$$F_0 = \frac{1}{T_0},$$

there results

$$N = E\left(\frac{tx}{T_0}\right) = E(L_0 F_0 \gamma^2 x)$$

where N is the number of pulses in the line and $E\left(\ \right)$ is to be read "integer part". Hence, there results that for y and z constant, N is proportional to yz

$$N \sim yz. \tag{16}$$

Since λ is small, an aproximate formula for t_x is obtained by increasing the series in the parenthesis:

$$t_x \approx L_0 \gamma x \exp(\lambda L_0 \gamma x)$$

Noting the line length by l, we further have

$$t_l = L_0 \gamma\ l \exp(\lambda L_0 \gamma l)$$

The approximation is satisfactory if:

$$\exp(\lambda L_0 \gamma l) < 1 + \varepsilon$$

where ε is the accepted error. Hence:

$$\lambda < \frac{\ln(1+\varepsilon)}{L_0 \gamma l} \approx \frac{\varepsilon}{L_0 \gamma l} = \frac{\varepsilon}{t_0},$$

ε being small.

The propagation time of the pulse from the input to the output of the line has been noted $t_0 = L_0\, \gamma\, l$. Formula (15) becomes

$$L = L_0 \left(1 + \varepsilon \frac{t}{t_0}\right)$$

With this condition it is possible to determine the modulation upper limit frequency of the line parameters. For example if

$$L = L_0(1 + \mu \sin \omega t),$$

by series development round the point $t = 0$ one obtains:

$$L \approx L_0(1 + \mu\omega t),$$

hence

$$\omega < \frac{\ln(1+\varepsilon)}{\mu L_0 \gamma l} \approx \frac{\varepsilon}{\mu t_0} \tag{17}$$

With regard to the frequency modulation of the pulses, an aproximate computation can be given here also. For example if we have:

$$T = T_0 + n\theta, \quad n = 0, 1, 2, \ldots$$

for the interval $(0, t_l)$ the number of pulses may also be N, if the frequency varies sufficiently slowly in this interval. Indeed, we have:

$$t_l = NT_0 + \sum_0^N \theta n = NT_0 + \theta \sum_0^N n$$

hence

$$\frac{t_l}{T_0} = N + \frac{\theta}{T_0} \sum_0^N n$$

The following condition therefore results:

$$\frac{\theta \sum_0^N n}{T_0} < 1$$

or

$$\theta \sum_0^N n < T_0$$

The sum of the N first natural numbers is, however:

$$\frac{N(N+1)}{2}$$

hence

$$\theta < \frac{2T_0}{N(N+1)} = \frac{2}{N(N+1)F_0} \tag{18}$$

This condition may also be set in another form; the interval between the last and forelast pulse is:

$$T = T_0 + N\theta$$

this corresponding to an instantaneous "frequency":

$$F = F_0 - \Delta F < \frac{1}{T_0 + N\theta}$$

Substituting condition (18) we have:

$$\Delta F < F_0 - \frac{N+1}{T_0(N+3)} \tag{19}$$

or

$$\Delta F < \frac{2F_0}{N+3}$$

In other words in the time interval $(0, t_l)$ the frequency deviation should be smaller than $\frac{2F_0}{N+3}$

To conclude, from (17) and from (19) the pass bands are deduced for the signals y and z so that the product $yz - N$ be influenced by an error smaller than ε which is chosen arbitrarily.

The principle diagram of the multiplier is shown in the chart.

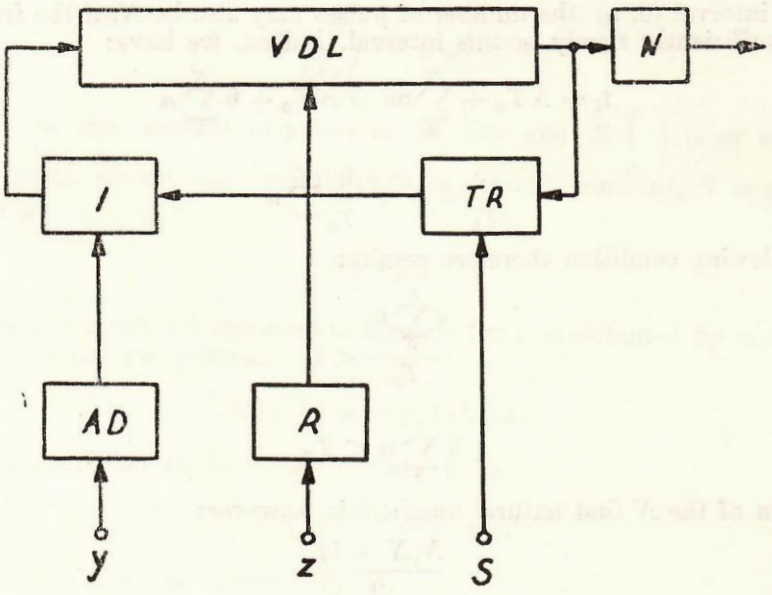

The following are shown in this diagram:

VDL = variable delay line

y = input terminal of potential signal y

AD = digital analogue converter at whose output linear modulated pulses appear of the same frequency as the signal y

I = switching relay which interrupts the input at the moment when the first pulse has appeared at the line output

TR = block which controls the beginning of the cycle (the tact frequency being applied to terminal S) and which controls the ending of the tact when the first pulse appears at the line output.

R = resolver to linearize adjustment of the line parameters

z = terminal for potential signal z.

To obtain multiplying in four quadrants, a reversible counter may be used at the output, meant to operate in four tacts according to the following programme:

direct counting:

1) $t_0 F_0$

2) $(t_0 + \Delta t)(F_0 + \Delta F)$

reverse counting:

3) $t_0 (F_0 + \Delta F)$

$F_0 (t_0 + \Delta t)$

In this case, after the four tacts, the counter displays the result of the multiplication, i.e. the product $\Delta t \, \Delta F$; the conditions (17) and (19) should be reported to the time representing the total duration of the 4 tacts.

A more detailed study would lead to a system of difference equations, equivalent to system (1). This results from the fact that the artificial line is achieved with elements having localized parameters.

The study of the difference equations is all the more interesting, since the artificial line represents a simulating process of the mathematical models based on the equation of wave propagation in media without losses.

Since the equation with differences can widely be applied in economy, the possibility of some applications in economy, which would require the simulation of processes described by such models, is noteworthy.

ETUDE THEORIQUE D'UN MULTIPLICATEUR FONDE SUR LA LIGNE A RETARD VARIABLE

Le nombre d'impulsions contenues à un certain moment dans la ligne de retard est égal au produit entre la fréquence des impulsions et le temps de leur propagation de l'entrée à la sortie de la ligne.

On étudie la possibilité d'obtenir un multiplicateur à entrée A et sortie D par une variation simultanée des impulsions et du temps de propagation à travers la ligne.

On établit en même temps les conditions qui limitent la vitesse de variation des signaux d'entrée pour obtenir la précision voulue.

ТЕОРЕТИЧЕСКОЕ ИССЛЕДОВАНИЕ МУЛЬТИПЛИКАТОРА ОСНОВАННОГО НА ЛИНИИ С ПЕРЕМЕННЫМ ОПОЗДАНИЕМ

Число импульсов, находящихся на определенный момент на линии опоздания, равно произведению частоты импульсов и времени прохождения от входа до выхода линии.

Изучается возможность получения мультипликатора с входом A и выходом $Д$ путем одновременного изменения импульсов и времени прохождения через линию.

Определяются условия, ограничивающие скорость изменения сигналов входа для получения желаемой точности.