Dr. M. ENACHE
"ION MINCU" Institute of Architecture

Notes on the Use of Market-Oriented Urban Games in the Context of Planned Economies

The author deals with the difficulties and questions arising in relation with the job of converting market-oriented urban games to be used in a planned economy.

By analysing the broad characteristics of urban planning and decision-making in socialism, the author presents two viable ways of adapting existing models and techniques to fit into a different socio-economic context: either by using rather simple, crude models, basically descriptive, which can be fitted to describe a different urban structure or by going very far into the analysis of cause-effect relationship models, sophisticated behavioral models which have a very complex causal motivation and could therefore be specific to a given situation.

A few attempts have been recently made to use a game to train managers of a socialist economy. During the past two years, an enterprise simulation to train industrial managers in Poland has been developed by Professor Myron Uretsky of New York University. By modifying a model of capitalist enterprise — used to train business management students at NYU — to incorporate the characteristics of the Polish economy, a Polish business was simulated (1). Professor Uretsky and his colleagues have been also involved in an application of the work in Hungary and, more recently, they are looking into the possibilities of doing such work in Romania.

Similarly, the idea of converting an urban game to be used in conditions of a socialist economy came recently to a number of people. Thus, Marshall Whithed of Temple University and Robert Blanning of Wharton School, University of Pennsylvania, are working together on the conversion of a game developed by the Environmental Protection Agency in the U.S. government, which has the advantage of being comprehensive — that is, it simulates the

economic, social, and political components of an urban system. They intend to explore the possibility of making the game available to people in other countries who wish to use it.

However, it is to be noted that a number of difficulties and questions arise in relation with such a complex job of converting a model or a technique, that is successfully being used in the U.S., into an efficient tool to tackle with an entirely different socio-economic context [2].

Physical planning and urban decision-making in Romania are closely related to economic planning and decision-making. This is a result of the great importance which is attached to the goal of fast economic development of the country. Figure 1 illustrates the interaction of economic planning with physical planning at three levels. The spatial distribution of economic growth at the national level results in the national physical plan which, in its turn, offers the main guidelines for major economic decisions at county level. Similarly, the spatial distribution of the economic growth at county level is performed by regional physical plans which indicate the growth rate for each locality. Finally, at local level, this growth is distributed by means of master plans, detailed plans, and location studies as ultimate tools to aid decision-making in urban areas. The process is two-directional and follows a step-by-step procedure. The development opportunities and resources at lower levels influence decisions at higher level.

The scheme presented in Figure 1 corresponds to an administrative structure and planning bodies at three levels, with one exception: there is no separate economic planning agency at the local level, and that is a consequence of the urban economics early stage of development. Economic planning at local level is done by the physical planning body which makes the major economic studies for the locality. For instance, in the case of Bucharest, alternative development plans and proposals for the future economic development of the city are currently elaborated by the main physical planning body, i.e. Institutul Proiect București.

Urban decision-making in Romania is regulated by the recent law for physical planning of the national territory and urban and rural settlements. According to this law, the master plans for big cities and county capitals are to be verified and sanctioned by the planning commissions of the said cities and by two central bodies, the State Committee for Planning and the Committee for the Popular Councils. The plans are then submitted to the top decision body, the Party and State Commission for Physical Planning, to finally get the approval of the President of Romania.

In the case of the master plans for smaller urban settlements, the decision loop is closed at the level of the Council of Ministers.

Implicitly, the master plans and the detailed plans must satisfy both the decision-makers at the local level — to insure the optimal development of the respective locality — and a number of requirements formulated by the decision people in various departments of the central decision bodies, i.e. in economic activities, commerce, transportation, health planning, education, culture and so forth. Most of these activities are subject to planning at national level and have certain quantitative and qualitative requirements of loca-

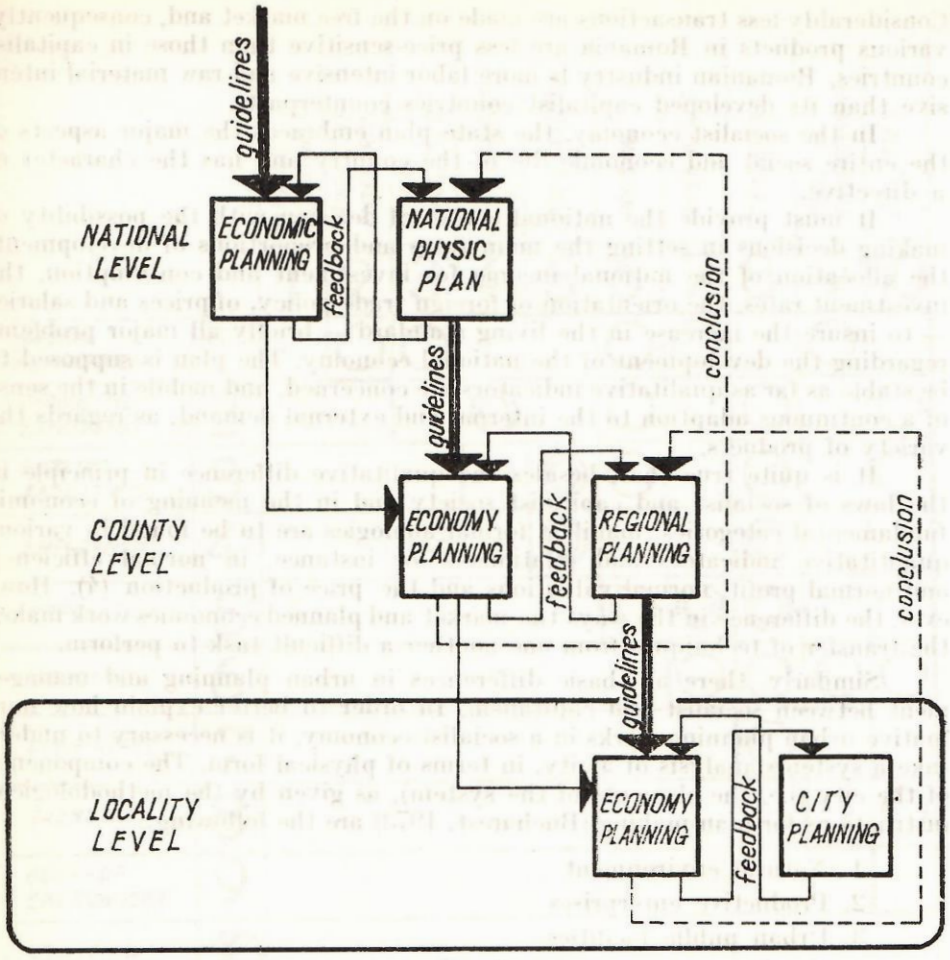

Fig. 1

tion and inter-departmental coordination. This trade-off process may well be, for instance, the object of an urban game developed for educational purpose.

However, a number of structural differences appear between market economies and managed economies, which require a different approach to games and simulations in a planned economy. To summarize some of the major differences in the structure of the economy [3]:

In a socialist economy, almost all production and distribution enterprises are owned by the socialist state, and the managers and workers in these enterprises are employed by the state. The capital allocation decisions are made by the central organs of government and by the branch unions. As a consequence of state ownership, the economic system is more centralized than in capitalist countries. Also, aside from the socialist and capitalist markets, the domestic market, in both urban and rural areas, is much narrower indeed.

Considerably less transactions are made on the free market and, consequently, various products in Romania are less price-sensitive than those in capitalist countries. Romanian industry is more labor intensive and raw material intensive than its developed capitalist countries counterparts.

In the socialist economy, the state plan embraces the major aspects of the entire social and economic life of the country and has the character of a directive.

It must provide the national center of decision with the possibility of making decisions in setting the main rates and proportions of development, the allocation of the national income for investment and consumption, the investment rates, the orientation of foreign trade policy, of prices and salaries — to insure the increase in the living standard — briefly all major problems regarding the development of the national economy. The plan is supposed to be stable as far as qualitative indicators are concerned, and mobile in the sense of a continuous adaption to the internal and external demand, as regards the variety of products.

It is quite true that, besides the qualitative difference in principle in the laws of socialist and capitalist society and in the meaning of economic fundamental categories, manifest formal analogies are to be found in various quantitative indicators and relations — for instance, in normal efficiency and normal profit, normal valuations and the price of production (4). However, the difference in the ways the market and planned economies work makes the transfer of techniques from one another a difficult task to perform.

Similarly, there are basic differences in urban planning and management between socialist and capitalism. In order to better explain how normative urban planning works in a socialist economy, it is necessary to undertake a systems analysis of a city, in terms of physical form. The components of the city (i.e. the elements of the system), as given by the methodological instructions for plan-making (Bucharest, 1973) are the following:

1. Natural environment
2. Productive enterprises
3. Urban public facilities
4. Employment
5. Population
6. Housing
7. Open space
8. Urban transportation
9. Built-up environment
10. Utilities

However simplified this scheme, it allows for further explanation of urban statics and dynamics in socialism. For instance, an interaction matrix of the urban structure may be derived, where distinction is made between quantitative and spatial relationships (the distinction belongs to the author of this paper). Figure 2 illustrates the urban structure, as the set of the direct and important relationships between the urban components. These relationships can be further represented like in Figure 3. They are the following:

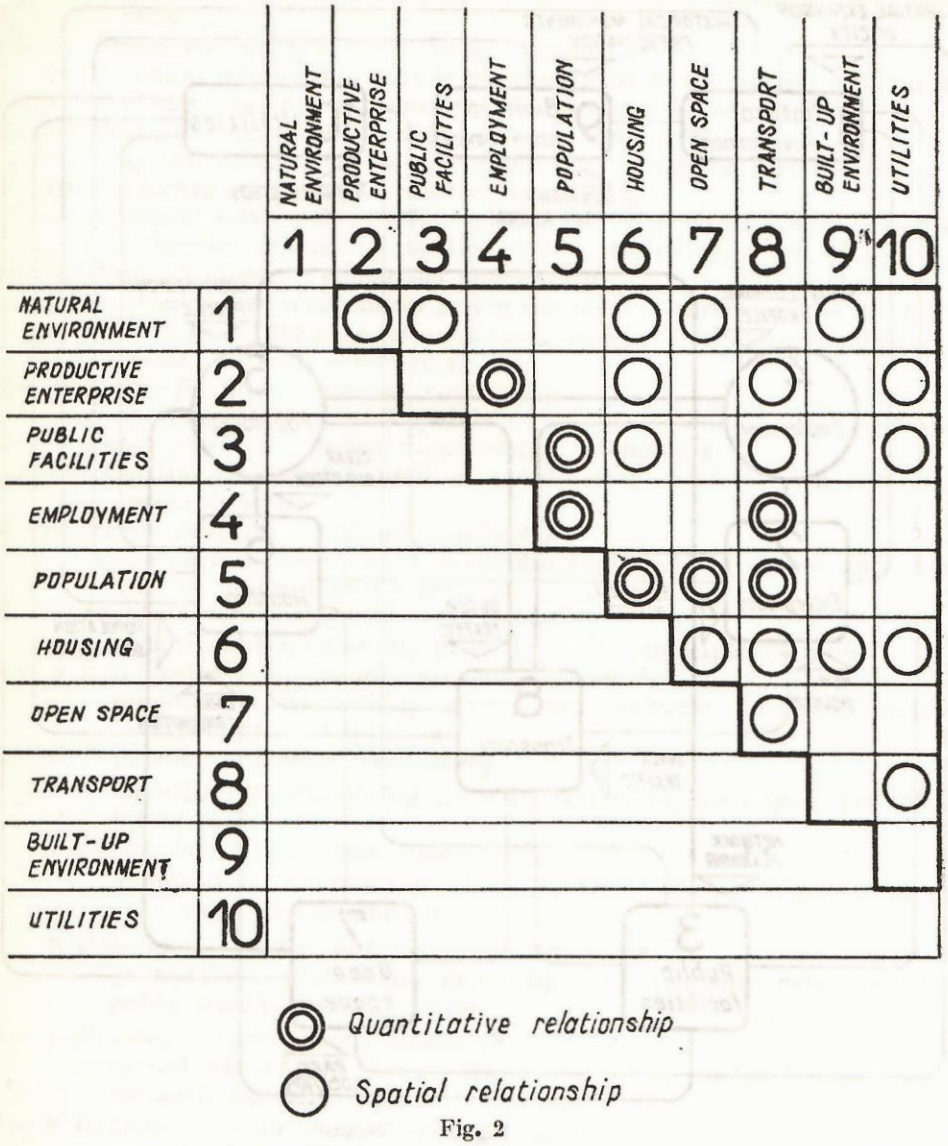

Fig. 2

1— 2 *Natural environment — productive enterprises relationship*
— spatial relationship determining the industrial location as a function of natural environment

1— 3 *Natural environment — public facilities relationship*
— spatial relationship of facility proximity to the natural environment

1— 6 *Natural environment — housing relationship*
— spatial relationship of optimal residential location as to natural environment

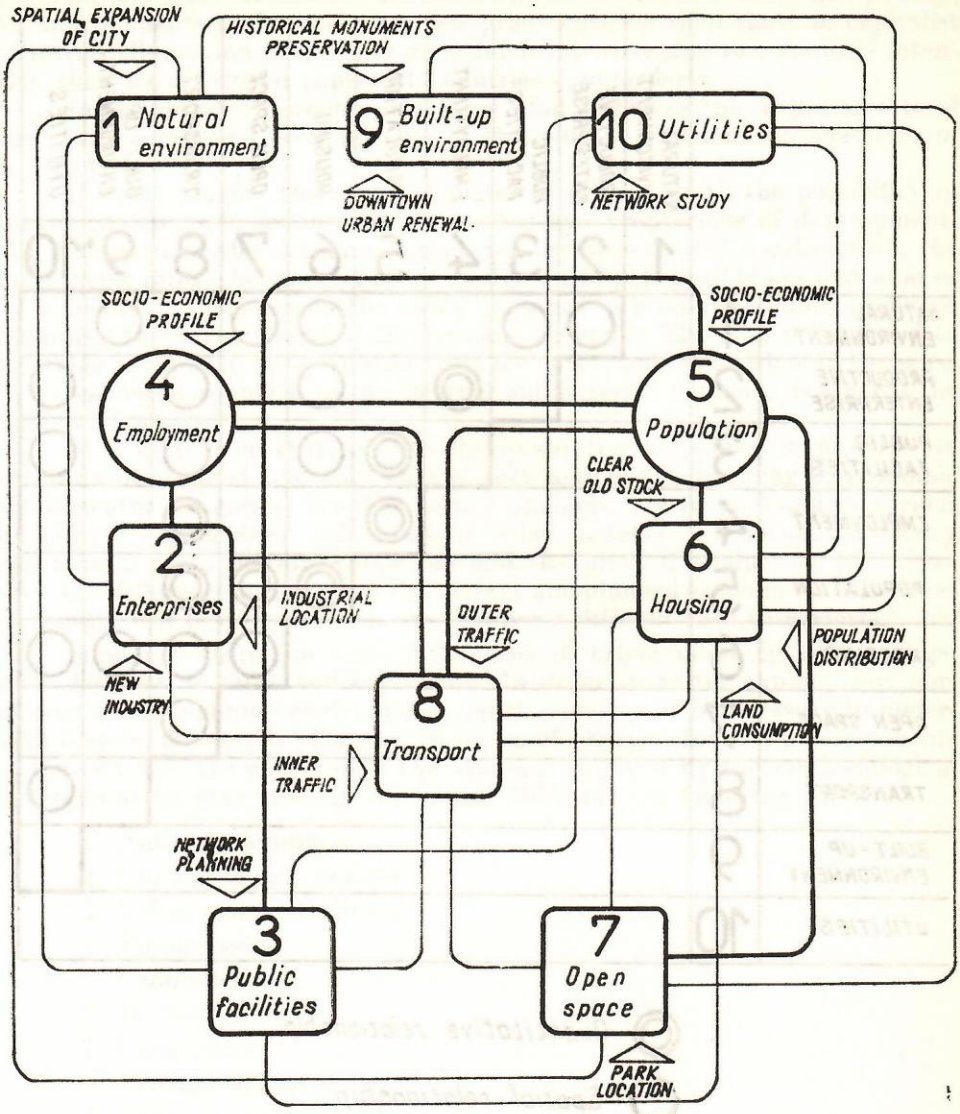

Fig. 3

1— 7 *Natural environment — open space relationship*
— spatial relationship of open space and parks location on sloping sites and degraded land of no use for building purposes

1— 9 *Natural environment — built-up environment relationship*
— spatial relationship; natural environmental qualities are used to obtain a best urban design and composition

2— 4 *Productive enterprises — employment relationship*

— quantitative relationship given by the floor space per employee ratio

2— 6 *Productive enterprises — housing relationship*
— spatial relationship that is most essential in the spatial structuring of the city; it determines the journey-to-work length

2— 8 *Productive enterprises — urban transportation relationship*
— spatial relationship of accessibility to productive enterprises

2—10 *Productive enterprises — utilities relationship*
— spatial relationship; efficient location of productive enterprises is a function of existing utilities (water, electricity, sewer, etc)

3— 5 *Public facilities — population relationship*
— quantitative relationship giving the level of services; it is given by floor space per user ratio for each category of service facilities, i.e. social, cultural, commercial, etc

3— 6 *Public facilities — housing relationship*
— spatial relationship of public facility accessibility from residence

3— 8 *Public facilities — urban transportation relationship*
— spatial relationship used in coordinating services with transportation facilities

3—10 *Public facilities — utilities relationship*
— spatial relationship used in coordinating facility location with existing or planned utility network

4— 5 *Employment — population relationship*
— quantitative relationship given by labor participation ratio

4— 8 *Employment — urban transportation relationship*
— quantitative relationship giving the maximum volume of public transportation at peak hours

5— 6 *Population — housing relationship*
— quantitative relationship given by residential floor space per inhabitant ratio

5— 7 *Population — open space relationship*
— quantitative relationship given by the ecological requirement of open space per inhabitant

5— 8 *Population — urban transportation relationship*
— quantitative relationship given by car ownership ratio and by public transportation facilities

6— 7 *Housing — open space relationship*
— spatial relationship of open space location at various levels: neighborhood, district, city

6— 8 *Housing — urban transportation relationship*
— spatial relationship of residential accessibility

6— 9 *Housing — built-up environment relationship*
— spatial integration relationship

6—10 *Housing — utilities relationship*
— spatial relationship of residential location as a function of existing utility network

7— 8 *Open space — urban transportation relationship*
— spatial relationship of open space and parks accessibility

8—10 *Urban transportation — utilities relationship*
— relationship of spatial coordination of the two networks to attain efficient functioning of the city.

The major urban planning problems are also represented in Figure 3 in direct connection with the corresponding urban components.

The above picture of the urban system is a purely static one. However, urban growth brings in changes in both system's elements and their relationships. Urban development is basically determined by economic development which, in its turn, requires a sound demographic and social basis. Indeed, if the labor demand is not matched by the supply offered by the existing population structure by age and sex, as well as by its natural growth, additional labor is required, which can be supplied either by population inmigration or by daily commuting of the population in the region.

Urban growth results in an increased number of residential units and public facilities, as well as an expansion of road infrastructure and utility network. But it also implies changes in the system's structure. To take an example, as a general rule urban growth modifies the 4—5 employment — population relationship as labor participation ratio usually declines as a result of the increase in labor productivity. Complementary, industrial employment/service employment ratio declines as tertiary activities become more important. Or, to take another example: the 5—8 population — urban transportation relationship is modified as a result of both increased car ownership ratio and increased public transportation facilities.

Similarly, the 5—6 population — housing relationship is gradually modified by an increase in housing construction and by an increased standard of floor space per inhabitant ratio.

As the practice of urban planning in socialism has an emphatic normative character, the modifications in the structural relationships imply a change in the very norms, standards and principles of urban planning. This is the case for instance with forecasting the public services needed for, say, year 1990. The increase of public services demand is not proportional to the population increase, as the floor space per user ratio itself goes up with time.

Since urban dynamics in socialism is controlled by means of normative planning, which is the opposite of the laisser-faire policy, coordination of urban growth is quite a difficult job to do. Not only balance between various activities is to be achieved, in order to attain maximum efficiency, but also balance between economic activities and available labor (masculine and feminine) should be reached in order to match the variable labor demand with the variable labor supply, and conversely, to secure a job for every potential laborer. Another crucial aspect of urban management in planned economies is to train workers in order to secure the necessary skilled labor for both basic and service economic activities.

Control of urbanization is even more difficult to achieve in the case of urban settlements which experience a high rate of economic growth, and consequently, a sharp population increase, say, doubling their population in an interval of 15—20 years. Certain phenomena bring in a number of serious problems, like abundent immigration sharply increasing the housing demand-commuting, that overloads the urban and regional transportation infrastruc-

ture and facilities at peak hours, percent increase in young people, which requires a large number of additional sport, education and cultural facilities a.s.o.

In general, social and economic forecasting studies for a locality end in defining its *socio-economic profile*, which indicates the growth rate of the said locality, as expressed by population forecasts, economic activities forecasts, corresponding demand for housing and socio-cultural and commercial facilities, open space requirements, estimated future automobile traffic etc. Quantitative requirements estimated are then converted into land requirements for every specific activity in accordance with the respective floor space ratio — a variable with time itself. This is the first aspect of urban planning, i.e. quantitative study.

The second aspect is the spatial study of urban development, i.e. the spatial distribution of activities according to certain principles of location. It is interesting to note that the spatial relationships between, say, economic enterprises, residential districts, and transportation, vary if certain quantitative relationships vary, e.g. 5—8 population — transportation relationship: indeed, the increase in car ownership, or else better solutions to the public transportation problem, say, a subway system, lead to a much greater flexibility in residential and service location as to enterprise location.

It is common for a number of Romanian towns and cities to double, triple, or even quadruple their population in a rather short interval of time, say, 15—20 years. Under these circumstances, the problems of efficiency in functioning, resource allocation, and energy consumption become crucial.

If the growth rate is very high, the urban system is extremely sensitive to structural changes, i.e. variations in either quantitative or spatial relationships. Changes in intra-urban industrial location for instance should be reflected in corresponding changes in residential location. A major role is naturally attributed to control or planning variables which can influence and direct urban growth. The number of these *planning tools* is decidedly much bigger in socialist urban planning than in market economies. This is another important difference between the two socio-economic systems that should be reflected in the design of an urban simulation model.

The methodology for plan-making in managed economies can be synthesized as follows: a number of basic and service activities are given for each locality, setting the main rates and proportions of development. Future basic employment can be easily computed if we use the given growth rates for basic activities correlated with the labor productivity and the technological advances correction. Then future population is derived using the basic employment to population ratio, which may itself vary with time. Commercial, social, and cultural space is a function of total population. The facilities required for, say, year 1980, 1990, 2000 etc, are then estimated using standards of floor space per person for every type of facility.

In the market economy, a large number of planning decisions are left to market forces, particularly in activities strictly in the private sector, such as housing construction. Private constructors and buyers tend largely to determine the size, density, quality, and cost of the units that are built. A type of

market response may be observed as well in the provision of some public facilities, such as transportation and recreation. The need for providing these facilities is evaluasted by public agencies partly through the use of extensive demand-oriented models. With many constraints removed or relaxed, the problem of planning in a market-oriented economy is not so much one of feasibility as it is of optimality.

In the centralized metropolitan planning of the managed economies the main problem is optimizing social welfare. The method is to set certain minimum standards and to attempt to produce a design meeting these standards either subject to a budget constraint or at a minimum total cost. The procedure of finding a plan subject to both budget and performance constraints is no longer a problem in optimizing, but one of feasibility (5). Socialist planning develops planning constraints, which may consist of specific items such as minimum floor space requirements, insulation requirements, local open space standards, distance restrictions on the location of schools, shopping areas a.s.o. Standards may also be expressed more indirectly through specifications of acceptable patterns of development that may require, as in the recent law for urban planning, certain residential densities in urban areas, for each rise level of apartment houses.

The standards may be regarded as having two specific advantages. First, in almost every case, the existence of standards that serve as constraints make the solutions of planning problems much easier by reducing the number of options open to the planner. Second, each constraint is usually related to a single, directly identifiable social objective, such as the adequacy of living space or the safety of the small children on their way to the elementary school. This social desideratum makes it appear very simple to justify the planning standards arising from it, and by extension those plans that embody the constraints must themselves be beneficial.

Prior to 1969, metropolitan master plan studies in Romania had a time horizon of 10—15 years. The recent experience in forecasting has offered a more scientific basis for planning for the next two or three decades. Planning as such is no more operational, but strategic, i.e. it involves radical changes in both quantitative and spatial relationships of the urban system. Under the circumstances, planning has to utilize the most flexible tools of urban analysis. Metropolitan plan-making must have an open, dynamic, and continuous character. Analytical models of urban structure have to be replaced by games and simulations.

Conditional predictions — if X occurs, then Y will follow — are in this case of great interest to planners, and so is their special case — the impact analysis, where the interest is focused on the consequence that should be expected to follow a specified exogenous impact (change in X), if the environment were otherwise undisturbed.

Urban decision-making requires tools to:

1° evaluate the impact of urban development decisions, i.e. urban renewal, zoning decisions, infrastructure investments, etc.

2° predict the changes in the urban structure that are the effect of changes in the socio-economic profile of the locality in view.

3° specify the optimal spatial distribution of activities in an urban system, to allow for maximum accessibility, best population servicing, minimal energy consumption, and maximum social benefits.

In my opinion, there are two viable ways of adapting existing models and techniques to a different socio-economic context: either by using rather simple, crude models, basically descriptive, which can be *fitted* to describe a different urban structure, or by going very far into the analysis of cause — effect relationship models, sophisticated behavioral models which have a very complex causal motivation and therefore are specific to the given situation. In this second case, the particular techniques and procedures, the algorithms and heuristics should be studied and transfered, and not the model itself. The degree to which the statistical tools succeed in truthfully *modelling* the given reality are of major interest here. And algorithms and heuristics could be subsequently built to model the various urban processes in the new context, and finally put together in a genuine simulation of the given reality.

However, there are two major difficulties in carrying out this task: first, the inability of model designers, in dealing with a complex system, to formulate accurate statements about the causal relationships between the variables describing the system being modeled. Second, the rather early stage of development of quantitative studies in urban economics and urban sociology in Romania. This discourages the application of the second alternative of going deeper into the analysis of cause-effect relationships to be used in models and simulations.

To resume the ideas: as a first possibility for using an urban game in Romania, a *man-machine* simulation can be used, in which computer processing of input data is periodically interrupted, and the intermediate state of the system is read out for examination by a human participant. He may adjust results to correspond with his judgements as to their inherent plausibility, or else he may use the intermediate results as a basis for a *policy* decision which is then fed back to the computer model as an exogenous change in values for specified variables or parameters. To be more clear, let me take the example of Bucharest. Given: *basic*, site-oriented activities, plus constraints of scale, density, land use, accessibility. Required: an ideal, optimal state of activities equilibrium, i.e. maximized accessibility, optimal service for population. After running the model, a confruntation of the optimal solution given by the computer with reality would bring in interesting conclusions and policy issues. Thus, some of the differences between reality and the model output would signal certain inefficiencies in the aggregate functioning of the city. The consequent policies would take into consideration the *planning tools*, such as housing construction, residential area expansion, density control, major transportation innovations, as well as population-serving activities location. Also, a different set of locations of basic activities could be simulated, thus changing the exogenous input for the model. However, many of the differences between reality and the output are due to behavioral, sociological, or political considerations which can, or cannot be imbedded in the equations of the model in the form of constraints.

The use of such an urban simulation would consequently permit a very flexible interpretation of urban phenomena and should not be regarded as a *frozen* tool of population and activities forecasting, but rather as a tool for

simulating the consequences of various urban planning actions. There is a large scope for empirical considerations, weighing, and checking the model output with the more complex social and environmental criteria. There is, in my opinion, a very good chance for the intervention of economists, sociologists, and politicians, as well as public participation at a certain level.

Finally, in the second possibility, the human participant can be included for educational purposes — to give him practice in responding to planning problems. However, in this case the decision-making interactions and complexities should be fully explored and made explicit, and thus a true cause-effect relationship between system's variables should be established.

REFERENCES

1. BLANNING W. ROBERT, KISIEL A., HAY D. and URETSKY M.: *The Great Polish Management Game — converting a management game to train Polish managers provides a glimpse into the workings of a socialist enterprise.* Computer Decisions, July, 1974, pp. 14—17.
2. ENACHE M.: *Towards a Methodology for Comprehensive Planning in Romania — a survey of the urban models and associated techniques and their applicability in the Romanian context.* Metro Center, The Johns Hopkins University, Balto, Md, April, 1973.
3. BLANNING W. R., KISIEL A., URETSKY M.: *The New Economic System in Poland.* Columbia Journal of World Business, December, 1973, pp. 113—119.
4. KANTOROVICH L. V.: *Mathematical Formulation of the Problem of Optimal Planning.* Socialist Economics (Nove and Nuti Eds), Penguin Books, 1972, pp. 435—469.
5. BRITTON HARRIS: *Consumer and Firm in Market and Non-Market Locational Planning.* Urban and Social Economics in Market and Planned Economies; Brown, Licari and Neuberger (Eds), Praeger, 1974, pp. 160—161.

OBSERVATIONS CONCERNANT L'UTILISATION DES JEUX URBAINS DANS LE CONTEXTE D'UNE ECONOMIE PLANIFIEÉ

L'auteur s'occupe des difficultés et des problèmes qui se rattachent à l'utilisation des jeux urbains dans une économie planifiée.

Faisant l'analyse des caractéristiques générales de l'aménagement du territoire et de la décision urbaine en socialisme l'auteur présente deux façons viables d'adaptation des modèles et des techniques existentes dans un contexte socio-économique différent, soit par l'utilisation de certains modèles simples purement descriptifs pouvant être calibrés pour décrire des structures urbaines diverses, soit pénétrant plus avant dans l'analyse des modèles des causes et de ceux de comportement raffiné ayant une structure causale complexe el pouvant être spécifiques à une situation donnée.

ОТМЕТКИ, ОТНОСЯШИЕСЯ К ИСПОЛЬЗОВАНИЮ ГОРОДСКИХ ИГР В ИСЛОВИЯХ ПЛАНИРУЕМОЙ ЭКОНОМИКИ

Автор рассматривает проблемы и трудности, возникающие в связи с использованием городских игр в планируемой экономике.

Анализируя основные характеристики планировки города при социализме, автор приводит два жизнеспособных способа приспособления существующих моделей и методов к новым общественно-экономическим условиям, а именно: либо используя простые модели-чисто описательные, которые могут быть модифицированы с целью описания различных городских структур, либо проникая в глубину с анализом причинных моделей и утончённых моделей поведения со сложной причинной структурой и которые могут быть характерными для данной ситуации.

10. III. 1978