O. MANGIUREA, eng.
P. R. POPESCU, eng.

Reliability in Operation of Electrotechnical and Electronic Sub-Assemblies Required for Automation

By means of Weibull's and of Poisson's distribution laws, the reliability in operation is studied for some products of the Bucharest "Electromagnetica" plant, concrete suggestions being made in view of improving the manufacture and quality checking of the respective products.

INTRODUCTION

The increase in the degree of complexity of manufactured products, automation and the improvement in the qualitative level of products are indissolubly linked with the introduction of new techniques in Romanian economy.

The more complex a product is, the greater the theoretic probability of failure for one of its sub-assemblies or component parts, thus leading to a decrease of reliability in operation. The assessment of more and more strenuous technical conditions regarding the endurance tests of the products and their use in automatic circuits — where they are dependent on the operation of a chain of products — also leads to the necessity of increased reliability in operation.

The analysis of reliability in operation allows to draw important conclusions with respect to the capacity of the products to fulfill all the functions for which they have been conceived, in accordance with the requirements demanded by technical norms or standards, in given conditions of operation and in a determined time period.

For the centralizing installations with relays, used in the railroads, the study of reliability in operation is of increased importance on account of the necessity to ensure safe transportation and avoid accidents in conditions of intensive traffic.

In the present study the authors have confined themselves to the analysis of two products: the "automatic crossing semibarrier" and the "contralizing installations with relays".

In view of analyzing the operation of the "automatic crossing semibarrier", use was made of the data obtained at the repeated enduraunce checkings carried out at the Bucharest *Electromagnetica* plant as well as some cheskings consisting in the uniunterrupted operation of the semibarrier for 6 months, equivalent to more than 2 years operation in exploitation. The operation of the semibarrier was carried out with a programmed system of raisings and lowerings and with a periodic checking of the main technical parameters.

To analyze the reliability of the "signalling, centralizing and line block installations", use was made of the data acquired at the Chitila station after prolonged operation, consequently to a strictly established informatory system.

Both analyses have led to conclusions resulting in the qualitative improvement of the products and to their increased reliability in operation, by improving the time-duration of their technical parameters.

THEORETICAL NOTIONS

The theoretical analysis of reliability in operation has been carried out by means of Weibull's and of Poisson's distribution laws, a comparison between the two methods being concomitantly effected. Both analyses were made by setting the limit condition of operational probability without any breakdown.

According to Weibull's distribution, the frequency function of breakdowns — the meaning of breakdown being a fault which prevents proper operation of the product — is given by relation

$$f(t) = \frac{m}{t_0} t^{m-1} \times e^{-\frac{t_m}{t_0}} \tag{1}$$

where

m and t_0 are the distribution parameters.

In this distribution the arithmetical mean t_m (respectively, the mean operating time of the product) is given by relation

$$t_m = \Gamma\left(\frac{1}{m} + 1\right) \times t_0 \times \frac{1}{m} \tag{2}$$

The mean square deviation of the product operating time will be

$$\sigma = t_0 \frac{1}{m} \sqrt{\Gamma\left(1 + \frac{2}{m}\right) - \left[\Gamma^2\left(\frac{1}{m} + 1\right)\right]} \tag{3}$$

Taking into account the fact that, in the present case, for the time interval taken into consideration (between two checkings) the installation must practically operate without any breakdown, owing to the requirements of maximum availability imposed by the specific conditions of railroads traffic, the probability of operation without breakdown for the installation in the

time interval t, relation (1) will be

$$P(t) = \frac{m}{t_0} \int_t^{\infty} t^{m-1} \times e^{-\frac{t_m}{t_0}} \times dt \tag{4}$$

Computing the integral, the probability of operation without breakdowns is obtained

$$\boxed{P(t) = e^{-\frac{t_m}{t_0}}} \tag{5}$$

Determining the parameters of reliability in operation requires t_m and t_0 to be evaluated as a function of the experimental results obtained, respectively, by analyzing breakdown frequency after as large as possible a number of experiments.

Taking into account the fact that the breakdown of a product used in automatizing railroad transportation control should be scarce, Poisson's distribution which represents a boundary case of binominal distribution when the magnitude of selection tends towards infinity, can be used in studying these breakdowns.

The probability for a happening to occur x times in a large number of n tests (if the probability for this happening p to occur is small) is given by the formula

$$P(x) = \frac{a^x}{x!} e^{-a} \tag{6}$$

with $a = rT$, where r = breakdown frequency, and T = mean operating time.

In case $x = 0$, there results the probability P for no breakdown to appear during the testing time T (probability of operation without breakdown)

$$P_0(t) = e^{-rT} \tag{7}$$

COMPUTATION OF AUTOMATIC SEMIBARRIER RELIABILITY IN OPERATION

The automatic semibarrier for railroads (RS-71540) is used to stop road traffic at railroad crossings when trains are approaching and pass.

When the engine draws near the crossing, traffic is stopped by the automatic lowering of the semibarrier beam which blocks the right side of the road in the sense of the road traffic. Acoustic and light traffic prohibition signals are emitted concomitantly.

The main sub-assemblies of an automatic semibarrier are the following:

— warning signal (RS-71538) which contains two lighting units and a device for acoustic signalling employing a 24 V d.c. warning bell;

— operating mechanism (FWM-10.00) provided with a 24 V d.c. motor of 95 W useful power, 2200 r.p.m., reducer gear, damping device, various terminal blocks, etc.

— beam (RS-71543), provided with three red lighting units towards the road and one yellow unit towards the railroad line.

When computing reliability in operation of the componenent parts for each of the sub-assemblies and when computing the final assembly, the

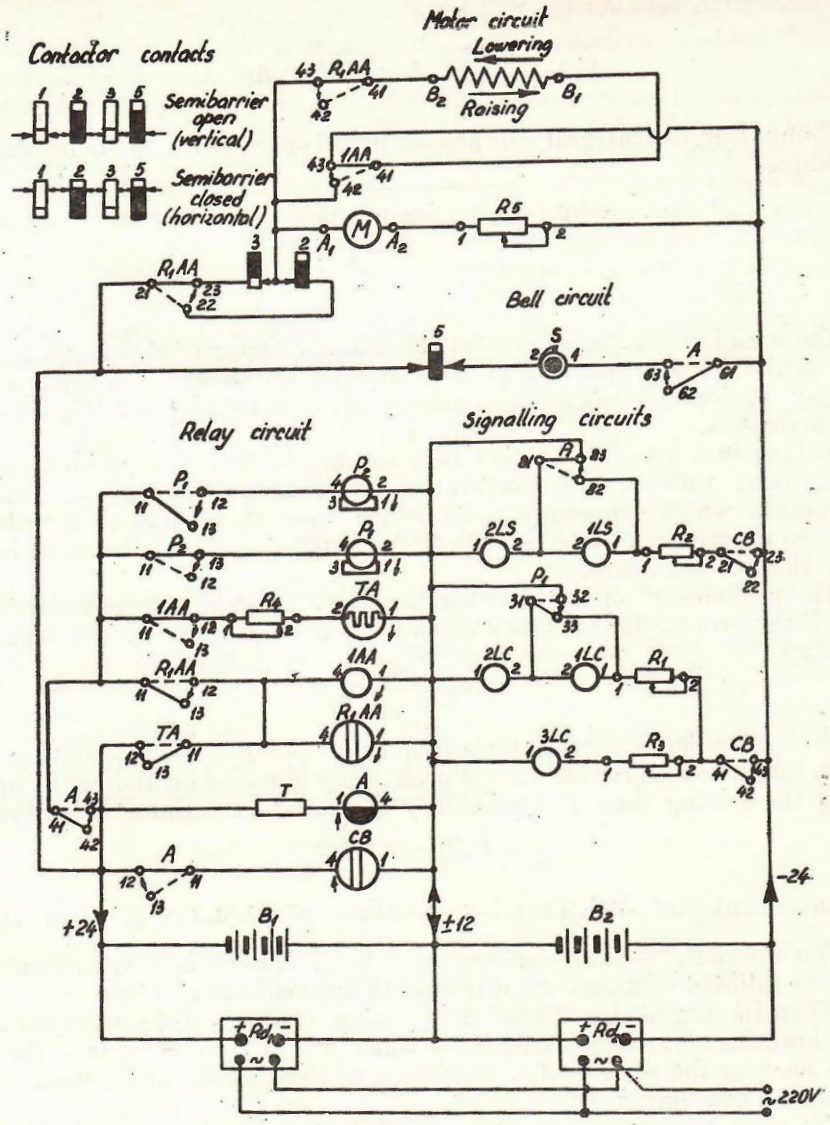

Legend

A - actuating relay
CB - barrier control relay
P_1, P_2 - pulsation relays
TA - actuating thermal relay
T - delaying relays
1AA - actuating auxiliary relay
R_1AA - actuating auxiliary repeater relay
R_1, R_2, R_3, R_4 - adjusting resistors (14Ω, 1A)
R_5 - adjusting resistor (2,2Ω, 10A)
1LS, 2LS - signalling lights
1LC, 2LC, 3LC - beam lights

Fig. 1. — Electric diagram

strenuous weather conditions in which the equipment must operate (conditions of outdoor medium) should be taken into account.

In the technical norms of the product these conditions are:

— temperature ranging from $-40°C$ to $+ 60°C$;
— relative air humidity max. 100%;
— air pressure 760 ± 30 mm Hg;
— ambient medium void of active chemical substances and gases.

The electric diagram for the operation of the automatic semibarrier, for which the computation of reliability in operation was carried out, is shown in fig. 1.

The study of reliability in operation for this diagram implied:

— knowledge of the operating principles of every subassembly in the diagram; degree of stress of the sub-assemblies under actual operating conditions; adequate maintenance;

— knowledge of the behaviour of each part under the strenuous weather conditions set by the norm; use of the indications in the specialty literature and of the laboratory checkings achieved in the plant;

— carrying out laboratory experiments and endurance tests for the barrier as a whole;

— evaluation of resulting reliability in operation; determining causes of decrease in reliability and technical measures taken for its improvement.

The general technical characteristics periodically followed up during exploitation are the following:

— useful power of motor	95 W
— supply voltage	24 V d.c. $\pm$ 10%
— starting current	max. 7 A
— operating current, stationary regime	max. 3 A
— maximum current when slipping	max. 8.4 A
— speed	2200 r.p.m.
— duration of beam lowering	$t_{a1} = 7$ to 10 sec.
— break	$t_{p1} = 2$ minutes
— duration of beam raising	$t_{a2} = 7$ to 10 sec.
— break	$t_{p2} = 5$ minutes
— beam rotating angle in vertical plane	90°
— signalling light lamps	12 V, 15 W
— horn supply voltage	24 V $\pm$ 10%
— optical signalling lamps supply voltage	12 V—15%
— dielectric rigidity under normal weather conditions (20°C $\pm$ 5°C) relative humidity 65% $\pm$ 15%, air presure 760 $\pm$ 30 mm Hg)	500 V_{ef} 50 c/s
— dielectric rigidity in wet conditions	500 V—15% at 50 c/s
— insulation resistance under normal weather conditions	25 M ohms
— insulation resistance in wet conditions	minimum 2 M ohms

Since the electric circuits also operate during breaks, the maximum total time of operation of the assembly for one barrier lowering plus raising is

$$T = t_{a1} + t_{a2} + t_{p1} + t_{p2} = 7'20''$$

Considering that a barrier effects 50 complete cycles per day, there results that the operating time of the assembly $T_1 = 365$ minutes $= 6$ h 6 minutes.

The semibarrier operated continuously in the plant courtyard for 6 months, respectively 182 days $\times$ 24 h $= 4408$ hours of operation $T_{ef} = 4408$ h.

The actual operating time for which the barrier was tested is:

$T_r = \frac{T_{ef}}{T_1} = 724$ days, the equivalent of almost 2 years of operation in exploitation.

The computation of reliability in operation by means of Weibull's distribution was based on the observation of the operating time of the elements subjected to investigation (component parts of the barrier), the cumulative frequency of the breakdowns $F_n(t_i)$, being determined.

The probability of operation without breakdown is

$$P_n(t_i) = 1 - F_n(t_i) \tag{8}$$

According to formula (5), the probability of operation without breakdowns is also

$$P_n(t_i) = e^{-\frac{t_{mi}}{t_0}}$$

by taking logarithms one obtains

$$\log_e P_n(t_i) = -\frac{t_{mi}}{t_0} \tag{9}$$

repeating the operation with logarithms, one obtains:

$$\log_e [\log_e P_n(t_i)] = m \log_e t_i - \log_e t_0 \tag{10}$$

having the form of a straight line equation

$$y_i = ma + b \tag{11}$$

where

$$y_i = \log_e [\log_e P_n(t_i)], \quad a = \log_e t_i \quad \text{and} \quad b = -\log_e t_0$$

Writing relation (11) for every moment t_i, the parameter t_0 can be computed by solving the system of equations:

$$\begin{aligned} m\Sigma \log_e t_i + n(-\log_e t_0) &= y_i \\ m\Sigma (\log_e t_i)^2 + (-\log_e t_0)\Sigma \log_e t_i &= \Sigma y_i \log_e t_i \end{aligned} \tag{12}$$

In table 1 one finds the frequency of breakdowns vs. t_m (mean operating time) of 1000 hours, the time t_0 and the ratio $\frac{t_m}{t_0}$; likewise, one finds the number of identical elements (n) existing in the electric diagram of fig. 1 and the product nrT, required to compute reliability in operation by means of Poisson's distribution.

Computation results of reliability in operation for automatic semibarrier elements
t_m = 1000 hours operation

Item	Element, sub-assembly investigated	$\frac{\text{Breakdowns}}{\text{Hours}} \times 10^{-6}$	t_0	n	$\frac{t_m}{t_0}$	nrT	$P_0 = e^{-\frac{t_m}{t_0}}$ or $P = e^{-rTt_m}$
1	2	3	4	5	6	7	8
1	Shunt d.c. motor	300	3.3×10^3	1	3.03×10^{-1}	3×10^{-1}	74.08
2	Mechanical system (connecting rod-crank)	0.5	2×10^6	1	0.5×10^{-3}	0.5×10^{-3}	100
3	Friction clutch	—	—	—	—	—	—
4	Camshaft	0.5	2×10^6	1	0.5×10^{-3}	0.5×10^{-3}	100
5	Contactor with 3 Ag-Cd pairs of contacts	12	8×10^4	1	12.5×10^{-3}	12×10^{-3}	98.75
6	Reducer gear	0.5	2×10^6	1	0.5×10^{-3}	0.5×10^{-3}	100
7	2.2 Ohms, 10A (adjustable) resistor	1.5	0.7×10^6	1	1.43×10^{-3}	1.5×10^{-3}	100
8	Warning signal lamp	100	5×10^3	2	2×10^{-1}	2×10^{-1}	81.87
9	Beam signal lamp	100	3.3×10^3	3	3.03×10^{-1}	3×10^{-1}	74.08
10	14 ohms, 1A adjustable resistors (3 pieces)	1.5	2.2×10^4	3	4.54×10^{-3}	4.5×10^{-3}	99.99
11	Beam	—	—	—	—	—	—
12	Warning bell	1.5	7×10^5	1	1.43×10^{-3}	1.5×10^{-3}	100
13	NF1L-400 type actuating relay (A)	5.6	1.8×10^5	1	5.5×10^{-3}	5.6×10^{-3}	99.99
14	CF1—150 type barrier control relay CB	5.6	1.8×10^5	1	5.5×10^{-3}	5.6×10^{-3}	99.99
15	CF1—800 type pulsing relays (P1P2)	5.6	1.8×10^5	2	5.5×10^{-3}	11.2×10^{-3}	98.8
16	TL3 type actuating thermal relay (TA)	6	8.3×10	1	12.2×10^{-3}	6×10^{-3}	99.99
17	NF1—800 type actuating auxiliary relay (1AA)	5.6	1.8×10^5	1	5.05×10^{-3}	5.6×10^{-3}	99.99
18	N1F1—150 type actuating auxiliary distributing relay	5.6	1.8×10^5	1	5.05×10^{-3}	5.6×10^{-3}	99.99
19	Delaying devices	6	8.3×10^4	2	12.2×10^{-3}	12×10^{-3}	98.75
20	Storage batteries (12V × 2)	10	5×10^4	2	2×10^{-2}	2×10^{-2}	98.02
21	Selenium rectifiers (6—48 V 10 A)	100	2.5×10^3	2	4×10^{-1}	4×10^{-1}	81.87

Comparing the expressions of reliability in operation by means of the criterion F or χ^2 obtained for the exponents $\frac{t_m}{t_0}$ and nrT by the two methods, there results that there are no differences capable of influencing the total reliability in operation of the assembly "automatic semibarrier".

Reliability in operation of the assembly is represented by the product of the reliability in operation for the component parts (their interference).

$$P_T = P_1 \times P_2 \times P_3 \times \ldots \times P_{21} \tag{13}$$

$$P_T = 99.99^6 \times 98.75^2 \times 98.8 \times 98.02 \times 81.87^2 \times 74.08^2 \cong 34.53\%$$

When estimating e^{-x} for $0 < x < 0.1$, the approximate curve in fig. 2 may be used.

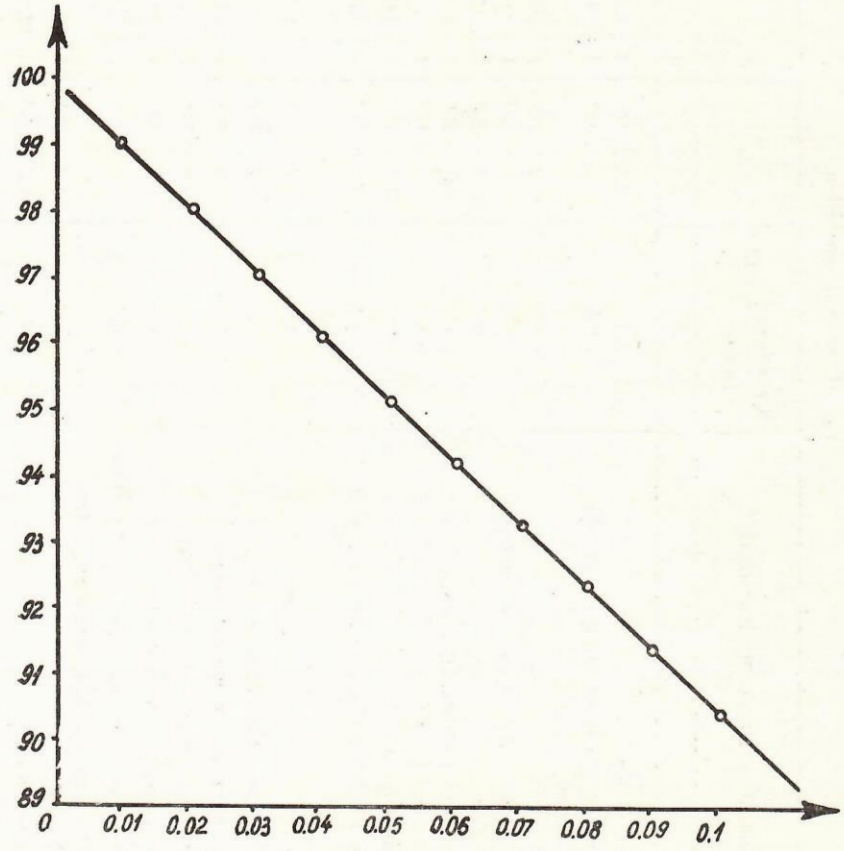

Fig. 2. — Characteristic e^{-x} for $0 < x < 0.1$

Making a first analysis of the results obtained for reliability in operation in a mean time $t_m = 1000$ hours representing approximately 6 months exploitation, there results that this is very low and that a series of measures leading to an acceptable level are required in view of achieving road traffic reliability.

The improvement of reliability in operation is achieved by studying the elements having low reliability in operation.

The realiability of the beam signal lights ($P_9 = 74.08\%$) and of the warning signal lights ($P_8 = 81.87\%$) can be solved by providing the barrier keeper with spare lamps.

These two conjugated elements only, present a reliability of $P_{8\times9} = P_8 \times \times P_9 = 60.65\%$, introducing a reliability deficiency $Q_{8\times9} = 1 - P_{8\times9} = 39.35\%$ which is thus eliminated.

The improvement of reliability in operation for the other elements having a relatively small reliability: shunt d.c. motor ($P_1 = 74.08\%$), selenium rectifiers ($P_{21} = 81.87\%$), storage batteries ($P_{20} = 98.02\%$), various types of relays and contactor with three pairs of contacts, can only be carried out by particularly careful periodic maintenance operations.

A follow-up of the breakdown frequency in time for these elements and plotting their curve of reliability in operation allows to determine the periodicity of the necessary overhauls in view of maintaining reliability in operation at the required level.

For the d.c. motor, the breakdowns appearing during duration tests were observed for 14 motors. The faults found were: sparks at the collectors, due to defective collector position, unsatisfactory adherence of collectors on commutator (either too weak or too strong), copper covering of neighbouring commutator bars of the commutator, etc., motor heating due to insufficient cooling air flow, the ventilating channels being stopped.

Most breakdown are due to inadequate motor maintenance (dirty commutators, oil dripping on commutator), as well as to adjustements varying from those stipulated in the norms.

The curve in fig. 3 shows reliability in operation of the d.c. motor used in the automatic semibarrier.

One notices that, at first, after the electric tests carried out in the manufacturing plant, the motors operated more than 200 hours without any breakdown. After 300 hours operation, reliability in operation is still within allowable limits $P = 97\%$. These 300 hours (considering that a barrier operates about 6 hours per day), represent approximately 50 days.

There results that by carrying out rigorous maintenance at a $1\ ^1/_2$ month (45 days) interval, reliability in operation exceeding 97% is ensured (curve 2).

For the selenium rectifiers the problems are of a different nature since their wear is evidenced by the variation of their electric parameters and there are no possibilities to repair them during exploitation in view of bringing them up to their initial parameters.

For these rectifiers the electric parameters (voltages, reverse and direct current, insulating resistance) should be observed in time, and when they no longer correspond to the data required for normal operation the rectifier should be replaced and the repairs carried out in the laboratory.

The more important breakdowns noticed have been: quick aging of the insulating materials in the transformers, due to large temperature and humidity variations; quick aging of capacitors and of selenium cells, for the same reasons.

Owing to this situation, total breakdowns of the rectifiers is expected after $1\ ^1/_2$ years and a spare rectifier should be available for every barrier.

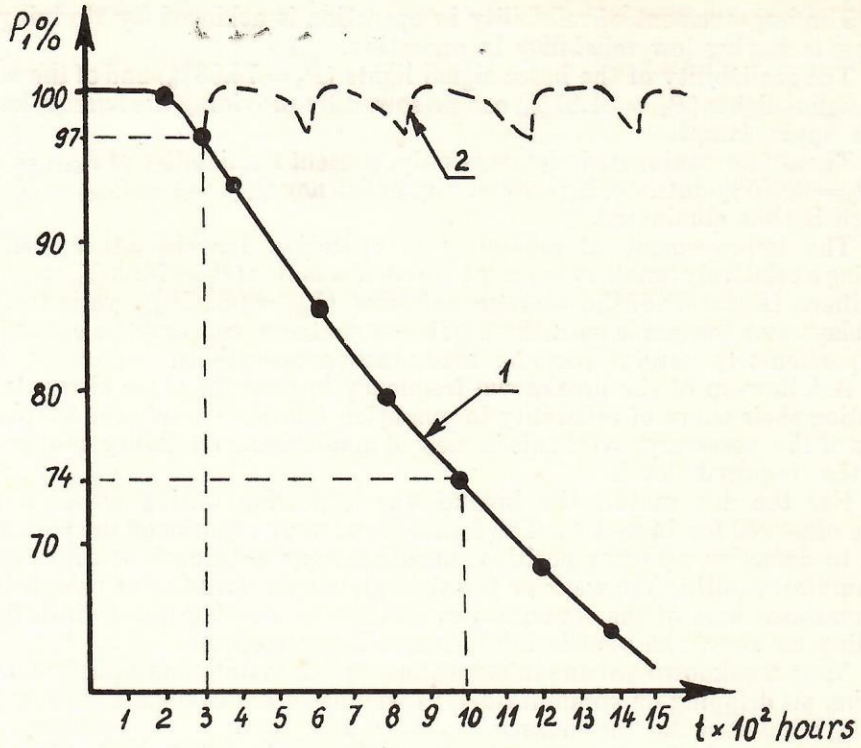

Fig. 3. — Variation of reliability in operation $P_1(t_1) = f(t)$ for d.c. motor
300 h ≃ 50 days operation × 6 h/day
1000 h ≃ 165 days operation × 6 h/day

Reconditioning can only be carried out in a laboratory, thus requiring its removal from the barrier.

In view of increasing reliability in operation, consequently to the tests carried out, the following technical measures should be taken: impregnation of the transformer coils, oversizing the selenium cells and employment of sealed capacitors.

The variation of rectifier reliability in operation is exponential (Fig. 4), with a very high ratio, beginning to decrease from 3000—4000 hours operation, equivalent with 1 $^1/_2$—2 years exploitation.

Periodic performance checking (every 6 months) permits to forecast the moment the rectifiers will fail.

For the storage batteries, periodic maintenance is required every 1 $^1/_2$ months, by completing the electrolyte and checking its concentration, checking element voltage when the rectifiers are disconnected.

In case the electrolyte is not completed when required (plates left exposed) there results a rapid decrease of reliability in operation. In the case of rational maintenance the curve of storage battery reliability in operation is close to that of the rectifiers (Fig. 5) (These curves have been obtained by computation, the time of operation (T) and frequency of breakdowns (r) being known ($P = e^{-rT}$).)

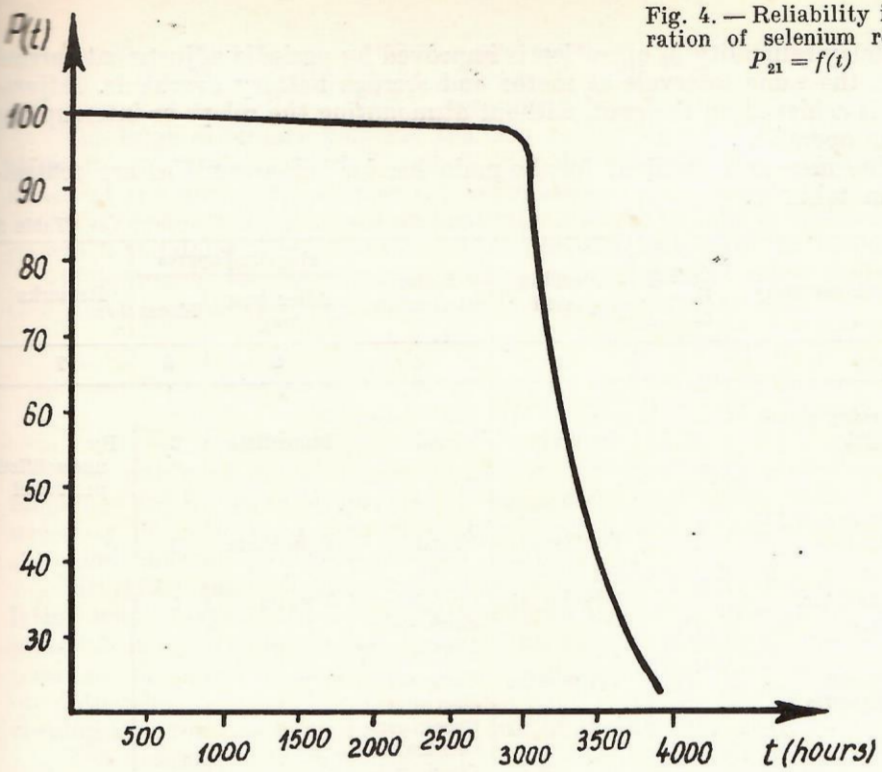

Fig. 4. — Reliability in operation of selenium rectifier $P_{21} = f(t)$

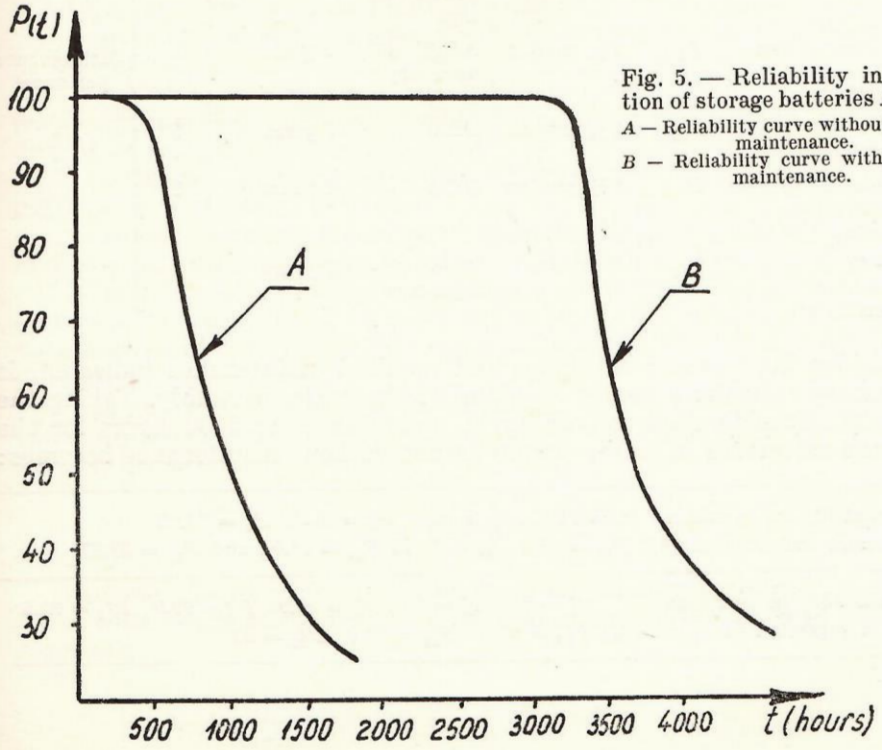

Fig. 5. — Reliability in operation of storage batteries $P_t = e^{-rt}$

A — Reliability curve without periodic maintenance.

B — Reliability curve with periodic maintenance.

Relay reliability in operation is improved by periodic adjustment carried out at the same intervals as motor and storage battery overhauls. Adjustment is achieved on the spot, without dismounting the relays or interrupting barrier operation.

The measures required for the main barrier sub-assemblies are centralized in table 2:

Table 2

Item	Sub-assembly	Reliability in operation	Checking period	Nature of checking	Required spares		Remarks
					After how long	Pieces	
0	1	2	3	4	5	6	7
1	Warning signal light	P_8	Continuous	Visual	Immediate	2	By unqualified personnel
2	Beam signal light	P_9	Continuous	Visual	Immediate	3	
3	Shunt d.c. motor	P_1	1 ½ months	Complete check + Maintenance	3 years	1	Maintenance personnel
4	Storage batteries	P_{20}	1 ½ months	Complete electrolyte; Check concentration; Check voltage	2 years	2	
5	Connector with 3 pairs of contacts	P_5	1 ½ months	Adjust if necessary	2 years	1	
6	NF1—800 type pulsing relay	P_{15}	1 ½ months	Ditto	4 years	1	
7	Time-delay relays (Siemens)	P_{19}	1 ½ months	Ditto	4 years	1	
8	6—48 V, 10 A selenium rectifiers	P_{21}	6 months	Check performance	2 years	1	

Besides the periodic checkings and required maintenance indicated, it is necessary to make a yearly checking of the entire assembly. Taking the above into consideration, reliability in operation after 1000 hours for the above sub-assemblies, in comparison to the one without maintenance becomes:

Reliability in operation without maintenance (%) $P_1 = 74.08$ $P_5 = 98.75$ $P_8 = 81.87$ $P_9 = 74.08$ $P_{15} = 98.8$ $P_{19} = 98.75$ $P_{20} = 98.02$ and $P_{21} = 81.87$

Reliability in operation with suggested measures (%) $P'_1 = 97$ $P'_5 = 99$ $P'_8 = 99.9$ $P'_9 = 99.9$ $P'_{15} = 99.5$ $P'_{19} = 99.5$ $P'_{20} = 99.9$ $P'_{21} = 99$

In this case, total reliability in operation is

$P'_T = 99.99^6 \times 99.9^3 \times 99.5^2 \times 99^2 \times 97 = 93.77\%$

in comparison with $P_T = 34.53\%$ previously found.

The large difference between the two values for reliability in operation show the particular importance that must be given to the proper maintenance of the automatic barrier sub-assemblies.

It is necessary to introduce an inspection form to be kept at the barrier and on which the dates of maintenance and the breakdowns found are to be noted.

Maintenance should be carried out every 45 days $\pm$ 5 days, taking care to achieve periodically the 8 necessary yearly maintenance jobs.

RELIABILITY IN OPERATION OF A RAILROAD STATION "CENTRALIZING INSTALLATION WITH RELAYS"

The study of reliability in operation for signalling, centralizing and blocking (SCB) installations is of particular importance owing to the necessity of ensuring transportation reliability and avoiding accidents in the conditions of intensive railroad traffic.

Hereafter, the analysis of reliability in operation for a centralizing installation with relays (CR), — the most modern in the framework of the SCB installation both from the standpoint of the circuits used and from the standpoint of the equipment employed — is made. This theoretical study is based on data received from the field, particularly from the Chitila station, concerning breakdown of the equipment and of the existing gear.

The design of the elements making up the installation is such that the following were strictly taken into account:

— oversized electric elements (coils, resistors), in view of their operation in favourable technical conditions;

— sealed main sub-assemblies (plug relays when directly mounted on frames or in sealed cupboards (code relays) to ensure they are free of humidity, dust or external chemical agents;

— oversized electric contacts with large contact areas and pressures (SCB relay contacts);

— supply sources, rectifiers, transformers, points electro-mechanism motors sized to permit their operation in favourable thermal conditions;

— mobile mechanical elements, points electromechanism bars and axles, switching keys, etc., are of solid mechanical construction with minimum possibilities for wear, not liable to lead to the necessity of being replaced after a relatively short time.

The analysis of reliability in operation, carried out on the main component sub-assemblies, has led to the improvement of the installation as it will be seen hereafter.

DESCRIPTION

Among the existing electrodynamic installations, centralizing installations with relays (CR) are the most widespread in the railroad stations of Romania.

All the functions of the installation are achieved electrically by means of circuits with relays. The installation consists of 2 parts:

— the part mounted inside;
— the part mounted outside.

The inside installation consists of:

— the controlling part formed of the control device with lighting diagram and the artificial unblocking cupboard;
— the operating part (relay chamber), comprising the equipment required to make up the circuits with relays (frames with plug relays, cupboards with plug code relays, etc.);
— power supply part of the centralizing installation.

The outside installation consists of:

— track circuit devices points, signalling or isolated section);
— light signals;
— equipment for signals (signal cupboards)
— shunting columns;
— points electromechanism;
— automatic barriers;
— barrier equipment.

For this installations the controlling equipment only include the controlling elements of the runs and the elements required for checking the unfolding of the station operational activity. The manner in which the control has been carried out is checked on the lighting diagram.

Therefore, any deficiency, any breakdown of an inside or outside element is noticed on the lighting diagram. Taking into account the fact that the probability (according to Poisson) of operation without breakdown is given by the formula

$$P_0(t) = e^{-rT}$$

where T = testing time
r = breakdown frequency

the computation of reliability in operation is made hereunder for various equipments of the centralizing installation with relays. The following will be noted in the tables:

— component elements of equipment influencing reliability in operation;
— reliability in operation for every element in part;
— total reliability in operation of equipment.

Total reliability in operation of the equipment (P_T) is the product of the reliability in operation for the elements composing the equipment, i.e. $P_T = \pi P_i$. The probability of operation without breakdowns is computed for one month. Hence, reliability in operation of the equipment formed of m elements, each comprising n_k units is:

$$P_T = P_1^{\frac{n_1}{12}} \times P_2^{\frac{n_2}{12}} \ldots P_m^{\frac{n_m}{12}}$$

this formula being applied as follows.

COMPUTATION OF RELIABILITY IN OPERATION FOR OUTSIDE INSTALLATION

1. Track circuit

Table 3

Component elements	Line track circuit	Section insulated by points	Reliability in operation for one element
Insulating joints	4	4	$P_1 = 99\,\%$
Supply transformer (AC)	1	1	$P_2 = 99.8\,\%$
Adjustable resistor	1	1	$P_3 = 99.5\,\%$
Conductivity connections	6	8	$P_4 = 99\,\%$
Relay transformer (RC)	1	1	$P_5 = 99.8\,\%$
Rectifier	1	1	$P_6 = 99.9\,\%$
Track relay	1	1	$P_7 = 99.9\,\%$
Electromechanism		1	$P_8 = 99.1\,\%$
Total reliability	$P_{T_1} = 99.05\,\%$	$P_{T_2} = 98.9\,\%$	

2. Points electromechanisms

Total reliability in operation of the points electromechanism is deduced as follows:

Table 4

Component elements	Pieces	Reliability in operation for one element
Electric motor	1	$P_1 = 98\,\%$
Clutch	1	$P_2 = 99\,\%$
Switch (points) blade	2	$P_3 = 99.5\,\%$
Friction clutch	1	$P_4 = 99\,\%$
Automatic switches	2	$P_5 = 99.9\,\%$
Checking rods	2	$P_6 = 99.5\,\%$
Shunting bars	2	$P_7 = 99.5\,\%$
Gaskets	4	$P_8 = 99\,\%$

Reliability in operation $P_{T3} = 99.1\,\%$

$$P_{T2} = P_1^{\frac{1}{12}} \times P_2^{\frac{1}{12}} \times P_3^{\frac{2}{12}} \times P_4^{\frac{1}{12}} \times P_5^{\frac{2}{12}} \times P_6^{\frac{2}{12}} \times P_7^{\frac{2}{12}} \times P_8^{\frac{2}{12}}$$

$$P_{T3} = 0.98^{\frac{1}{12}} \times 0.99^{\frac{6}{12}} \times 0.995^{\frac{6}{12}} \times 0.999^{\frac{2}{12}}$$

or

$$\log P_{T3} = \frac{1}{12}\log 0.98 + \frac{1}{12}\log 0.99 + \frac{1}{2}\log 0.995 + \frac{1}{6}\log 0.999 =$$

$$= \frac{1}{12}0.0088 + \frac{1}{2}0.0045 + \frac{1}{2}0.0022 + \frac{1}{6}0.0004 = 0.0042$$

Hence

$$P_{T3} = 99.1\%$$

P_{T1} and P_{T2} were deduced similarly.

The results gathered in exploitation have confirmed the reliability in operation of the track circuits and of the points electromechanism. This high reliability is obtained both owing to oversized elements and to the design of the kinematic and electric circuits. It becomes permanent owing to maintenance operations. The aim is to maintain the track circuits and electromechanisms in normal operating state, the reliability conditions being fulfilled. Thus, the points electromechanism requires the following maintenance operations:

a) daily check:

— if point makes proper contact with stock rail;

— state of shunting bars and of checking;

— clean state of points driven by electromechanism.

b) weekly:

— check locking and proper contact of point with stock rail in normal or shunted position of points;

— check operating condition of electromechanism component parts;

— inspect inside part of electromechanism;

— lubricate electromechanism.

c) twice a year, in March and October, adjust the electromechanism bars to make sure they operate in safe conditions and clean thoroughly.

In winter a glass containing calcium chloride will be introduced within the electromechanism box to remove the humidity which forms inside it. The glass will be refilled twice a month.

Taking into account the importance of the track circuit, all its component elements should be checked with great care and at the intervals set in the maintenance directions.

Particular attention should be given to the maintenance of the following:

— existence of free space between flange of the rail and ballast;

— proper state of cable pickets and of track boxes;

— proper state of insulating joints and of points insulation;

— ballast should be clean, and water lubrication in good condition;

— track circuit adjustment is to be carried out under the most unfavourable conditions from the standpoint of the state of the ballast (in spring, when the ballast is damp);

— checking shunting sensitivity of track circuits should be effected by an electromechanic, using a voltmeter and a testing shunt.

3. Points electromechanism checking and control circuit

Table 5

Component elements	Pieces	Reliability in operation for one element
Points starting relay PM (LKAIF1—100)	1	99.9 %
Points checking relay KM(IF1—1000)	1	99.8 %
Plus and minus points checking relays (NF1—800)	2	99.8 %
Change-over relay IM (PPI)	1	99.5 %
Rectifier group with resistor	1	99.5 %
Chemical resistors	4	99.9 %
Paper capacitors	2	99.5 %
Push buttons	4	99.9 %
Electromechanism	1	99.1 %
Connections	9	99.9 %
Total reliability in operation	P_{T_4}=98.98 %	

Owing to the larger number of elements of the points electromechanism checking and controlling circuit the total reliability of this sub-assembly is lower.

4. Lighting signals

Table 6

Component elements	Pieces	Reliability in operation for one element
Optical system	4	99.7 %
Electric lamps	4	99.5 %
Fire transformer	4	99.8 %
Fire relays	4	99.9 %
Connecting cable	8	99.9 %
Total reliability in operation	P_{T_5}=99.59 %	

Among the elements of the lighting signal a series of breakdowns may be remedied by replacing the elements which have failed (electric lamps and even relays).

5. Shunting columns

Table 7

Component elements	Pieces	Reliability in operation for one element
Switches	4	99.9 %
Signalling lamps	4	99.5 %
Horn	1	99.9 %
Connecting leads	1	99.9 %
Telephone	1	99.5 %
Total reliability in operation	P_{T_6}=99.5 %	

In this case also the signalling lamps can be replaced on the spot, thus increasing the reliability in operation of the unit.

6. Lighting signal equipment

Table 8

Component elements	Pieces	Reliability in operation for one element
Checking and control relays	5	99.9 %
Fire relays	2	99.8 %
Universal relay	2	99.9 %
Adjustable resistors	2	99.5 %
Transformers	1	99.8 %
Entering light signal	1	99.59 %
Warning device	1	99.59 %
Connecting leads	8	99.9 %
Total reliability in operation	P_{I_7}=99.75 %	

GENERAL COMPUTATION OF RELIABILITY IN OPERATION FOR THE CHITILA STATION OUTSIDE EQUIPMENT

The outside equipment of Chitila station is formed of:

— 60 points electromechanisms
— 20 outgoing signals
— 7 incoming signals
— 8 warning devices
— 25 shunting signals
— 30 insulated track sections
— 55 insulated points sections

Taking into account the computation of reliability in operation for the equipment by sub-assemblies and applying the summing-up formula we are able to determine reliability in operation of the entire outside equipment.

Table 9

Equipment Component elements	Pieces	Reliability in operation for one element	Reliability in operation for sum of elements
Insulated track sections	30	P_{I_1} = 99.05 %	97.63 %
Insulated points sections	55	P_{I_2} = 98.9 %	95.07 %
Points electromechanisms	60	P_{I_3} = 99.1 %	95.5 %
Points electromechanism circuit	60	P_{I_4} = 98.98 %	94.8 %
Lighting signals	35	P_{I_5} = 99.59 %	94.81 %
Signal cupboards	7	P_{I_7} = 99.75 %	98.54 %
Total reliability in operation			P_{Ti} = 81.85 %

Total reliability of the Chitila station outside equipment is sufficiently high in comparison with similar products of this complexity. Taking into account the requirements of reliability in operation for the case of railroad transportation there results that in view of achieving maximum availability and eliminating delays due to the breakdown of some elements, the latter should have the possibility of being replaced with maximum efficiency.

To this end all the relays in the assembly are of the plug-in type so that their replacement should not require unwelding of wires and repairs achieved

in the laboratory. Stress should be laid on the fact that the breakdown of these outside installations is immediately signalled by special safety circuits, railroad traffic being stopped until the failure is removed, accidents being thus avoided.

The taking over operations, by the user, when first starting exploitation, as well as the faultless maintenance of the outside equipment are of particular importance in view of obtaining increased reliability.

Only the reliability in operation for the outside equipment of railroad stations centralizing installations with relays has been analyzed above, for the following reasons:

— the computation methods for the inside installations is identical, reliability in operation of the component elements, sub-assemblies and general assembly being again analyzed:

— outside installations generally evidence a greater frequency of breakdowns since they are subjected to weather hazards which result in a noticeable decrease of their reliability in operation;

— the maintenance of outside installations is more difficult, both on account of their more difficult access (dispersion in the grounds) and of the various weather conditions in which actual maintenance is carried out.

CONCLUSIONS

The study achieved on reliability in operation of the electrotechnical sub-assemblies required by automation was centered on two applications in the domain of railroad transportation:

— The automatic barrier is a new product manufactured by the "Electromagnetica" plant, whose delivery started in August 1966 and whose reliability in operation has been studied on basis of the analysis of the design diagram and of the endurance tests carried out on the prototype in conditions as close as possible to the operating conditions.

The results obtained by this study have directly contributed to the design improvement of the product in its first manufacturing stage, an improvement which was made to stand out by the computation of reliability in operation.

The analysis of each sub-assembly in part permitted the elaboration of detailed maintenance directions whose application undoubtedly leads to the improvement of reliability in operation and to the prevention of breakdowns.

— The centralizing installation with relays — the second product studied — of great complexity, has been in operation at various railroad stations for several years and the analysis of its reliability in operation has been effected on basis of data gathered from the users, respectively by making use of the complaint records and the experience of the Romanian Railroads' repair laboratories.

The conclusions drawn for each sub-assembly in part are generally valid for installations of this type, since only the number of identical sub-assemblies differs from station to station, contingent upon the station size.

The experimental results gathered also allow the introduction of design and manufacturing improvements, as well as changes in the internal checking methods of the manufacturing works, these measures finally leading to im-

provements in product quality, to the increase of their reliability in operation and to normal passenger and goods traffic on Romanian railroads.

Thus, in the case of centralized records of reliability in operation for the various SCB units, an important contribution is brought in view of ensuring safe railroad transportation and increased efficiency in this domain, respectively, in view of improving the operating parameters of existing railroads.

REFERENCES

1. LEWIS, E.V., *Statistical Analysis*, New York, 1963.
2. CALABRO, S.R., *Reliability Principles*, Mc Graw-Hill Book Company Inc., New York, 1962.
3. MIHOC, G., and URSEANU, V., *Matematici aplicate în statistică*, Editura Academiei R.P.R., București, 1962.
4. MANGIUREA, O., and RANCU, N., *Siguranța în funcționare a produselor electrotehnice analizată prin metode statistico-matematice*, Editura Tehnică, București, 1965.

SURETE DE FONCTIONNEMENT DES SOUS-ENSEMBLES ELECTROTECHNIQUES ET ELECTRONIQUES REQUIS PAR L'AUTOMATION

Dans cette étude l'analyse théorique de la sûreté de fonctionnement a été effectuée à l'aide des lois de distribution de Weibull et de Poisson, une comparaison étant faite entre ces deux méthodes.

Pour la « demi-barrière automatique », un nouveau produit de l'usine « Electromagnetica », on a étudié la sûreté de fonctionnement en se basant sur l'analyse du schéma constructif et sur les essais d'endurance effectués sur le prototype dans les conditions les plus rapprochées de l'exploitation effective.

Pour l'installation de centralisation à relais la sûreté de fonctionnement a été étudiée en prenant pour base les données fournies par les registres de défections tenus à jour par les bénéficiaires.

Les résultats obtenus ont permis l'amélioration constructive et technologique des produits, la modification des méthodes de contrôle interne, ainsi que l'élaboration d'instructions détaillées d'entretien.

НАДЕЖНОСТЬ ФУНКЦИОНИРОВАНИЯ ЭЛЕКТРОТЕХНИЧЕСКИХ И ЭЛЕКТРОННЫХ ПОДАНСАМБЛЕЙ, НЕОБХОДИМЫХ АВТОМАТИЗАЦИИ

В этой статье теоретический анализ надежности функционирования был сделан при помощи законов распределения Вейбулла и Пуассона, и было сделано сравнение этих двух методов.

Для «автоматического полубарьера», нового изделия завода «Электромагнетика», надежность функционирования была исследована на основе анализа конструктивной схемы и опытов на сопротивление, произведенных над прототипом в условиях, близких к условиям эксплуатации.

Надежность функционирования для установки централизации с реле была изучена на основе данных, взятых из журнала, в котором получатель регулярно записывает все неисправности.

Полученные результаты позволили улучшить конструкцию и технологию изделий, изменить методологию внутреннего контроля и разработать некоторые подробные инструкции ухода за изделиями.