St. BÎRLEA
Polytechnic Institute
Bucharest

Some Considerations on the Entropy in Cybernetic Systems

The fundamental hypothesis where from both the present paper and other previous ones start, is that the active structure of certain cybernetic systems (effectory and command systems) can not be detached from the environment to which it is in a permanent interdependence.

As a result, any inductible cybernetic system is a reunion of three systems (black boxes) connected according to the principle of feedback, from which one represents the contact medium. For this reason, the medium represents a disturbing system which together with the inner disturbing elements specific to the system, tend in time to unsettle the operation of cybernetic reunion where they belong from.

In order to find some ways for quantitative determination of disturbing factors, the entropy is used as a measure of system negative performances.

By applying a bivalent logics, one considers that all systems include a certain entropy level which signifies the trend to disturbance in their functioning (operation). In relation to this fact, one defines the entropic states and entropic functions proper to several classes of systems. On the base of theoretical elements the conclusions resulted from the application of entropic analysis on certain industrial, postal and telecommunication systems are presented.

I. GENERAL REMARK S

Norbert Wiener has defined cybernetics as the science of control and communications for beings and machines.

As we have already shown in some previous works, we consider that the analogy implied by this definition is based primarily on selfcontrol and feed-back.

It is true that "Norbert Wiener's black boxes" have today a more exhaustive and general meaning.

System theory developed within last decades represents the fundamental frame for the new concepts, techniques and methods of modern cybernetics.

In our view the selfcontrol process is generated by the commun feature of all beings, of all natural, economic and social systems and of some machines created by man to self adjust continuously their inputs and outputs in order to get a "characteristic equilibrium state", using an appropiate communication and control system.

The self control is only possible when the black boxes — known today as systems — are formed of subdivisions, which are further considered as specialized systems of subsystems; one of them are intended for "executive" functions and other for control functions.

We do not intend to theorize this problem but we point out that "at limit" a selfcontrol process implies at least three black boxes (systems) rather than two as it was accepted until recently.

In any assembly of self controlling systems there is a primary set of systems linked on feed-back concept which perform executive and control functions and a secondary set representing a contact medium or internal systems assemblies which disturb the work of the primary set.

Our basic assumption is that the essential support of any cybernetic system is their active structure (the effectors and the control elements); this structure cannot be separated from the external medium with which it is in interdependence or with the internal perturbation element, specific to each system.

Consequently, we consider that any system (S) is a part of reality, characterised by a specific transformation structure.

According to this definition the system (S) could be mathematically described using structures of fundamental sets A, B, C, ... and a set of operations f, g, h, ...

If we want to isolate a system for examination that system could be described as:

$$S = \{X, Y \mid A\} \tag{1}$$

where X = input elements set
Y = output elements set
A = transformation structure of the system.

As we know in general, in system theory, a central role has the *state* concept which, at any moment (t) could reăresent into a quantified fashion the internal structure of the system.

The state concept generally represents the whole previous system evolution (its history) and on this basis implicitly determines its future development.

We appreciate that state concept as it is defined by modern system theory, can be used in cybernetic systems, only with some simplifying assumptions.

We have concluded that in order to be able to characterize an evolved cybernetic system using state concept, we have to add the specific system's

development program — integral part of its transformation structure — as it evidently occurs at living beings in genetic code form.

Also, the state concept does not defines precisely the ability of many cybernetics system to modify continuously its transformation structure under influence of restrictions or perturbation incoming from the existence medium.

One first step, surely a modest one which could direct to a more realistic description of the cybernetics system is, in our opinion, the association of a third black box (a system or an assembly of disturbing systems) at the internal active systems assembled on the feed-back principle.

This association can therefore explain why any complex cybernetic system as: living being economy, society, etc. is born, is developing based on its own program, and is modifying itself continuously until it ceases to exist or it moves into a new system.

Consequently, by definition, we shall consider that a cybernetic system is an assembly of any systems, which have the property to perform a mutual information transfer between its components (internal systems) and between its components and the medium (external system), in order to provide a self control of the whole systems assembly, on a given time interval.

Symbolically, we can write that $[\mathcal{S}]$ is a cybernetic system if it satisfies simultaneously the following conditions:

$$\mathcal{S} = \{\mathbf{X}, \mathbf{Y} \mid \mathbf{A}\} \tag{2}$$

where

$\mathbf{A} = \{A, B, C, ..., f, g, h\}$ is the complex structure composed by executives and control elements

$$\mathcal{S}(t) = \bigcup_{i=1}^{i=n} S_i(t) \qquad \text{— reunion property}$$

$$X_i(t)\,[\mathbf{X}(t); \quad Y_i(t)\,[Y(t) \qquad \text{— temporality}$$

$$A_i(t)\ [\mathbf{A}(t) \qquad \text{— preserving transformation}$$

structure property (selfcontrol).

$S_i = \{X_i, Y_i \mid A_i\}$ component systems, which isolated from the cybernetic system could be considered at any systems because $\{x_1, x_2, ..., x_i\} \in X_i$ and $\{y_1, ..., y_i\} \in Y_i$ and $\{a_1, a_2, ..., a_i, ..., a_n\} \in A_i$.

It can be remarked that cybernetic system $[\mathcal{S}]$ is compulsory temporal, while component systems could be constant in time.

Temporability, (selfcontrol in time) is therefore a fundamental condition of cybernetic system existence.

As the system looses its capacity of self control we arrive to its degradation; it can transform itself in the reunion of another temporal systems with or without selfcontrol properties or it can stop its activity, which means that the system is in a state synonimous with its death.

Thus, cybernetics confirms the dialectical thesis according to which, each phenomenon contains the germs of its own, destruction and quantitative accumulation could direct to qualitative jumps or the existence of a phenomenon stops due to its own development.

In this context we can draw the diagram of any cybernetic system (Fig. 1).

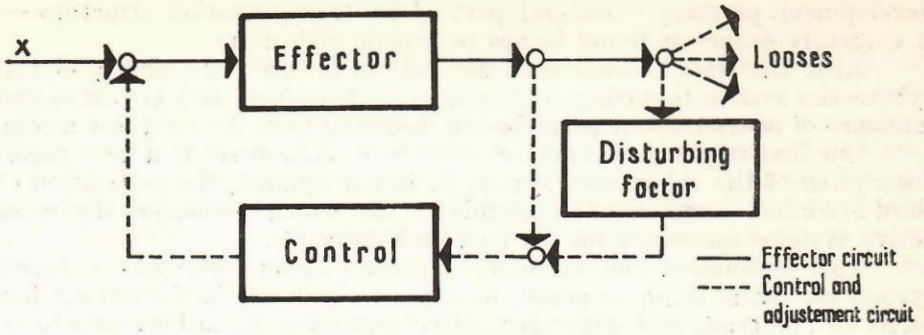

Fig. 1: Diagram of the cybernetic system

II. ENTROPY FUNCTION AND ITS MAIN CHARACTERISTICS

From the above diagram results that any selfcontrol action for such a feed-back structure must provide the achievement of the system evolution program as well the adjustment to perturbation.

In our researches, the main thing was to find out a method for quantitative determination of the disturbing factor.

Our conclusion was that the entropy, in informational meaning, computed with Claude Shannon's formula, is the most convenient for this determination.

Consequently, the new element, submitted to discussion is the association of entropy concept with the performances of a cybernetic system (negative feedback system).

We shall consider as accepted the following basic definitions:

— *message* — actual form through which the reality is reflected

— *information* — all messages which ought the description and transmission of system structural quality, using a material support

— *entropy* — undetermination degree evaluated by measure of information quantity referring to the disturbing factors of a system

— *entropic state* — general property of the cybernetic system to selfcontains perturbations which are opposed to the achievement of proposed aim

— *entropic function* $Z(H)$, mathematical expression of time evolution of systems entropy.

Using the above mentioned definions, the general diagram of a cybernetic system is shown in Fig. 2.

The disturbing element shown as a district system, in the cybernetic reunion, is convenally called entropic generator. In our opinion, it represents the totality of perturbations to which the system has to be confrounted and in respect to which it must self-organize.

According to (2) the cybernetic systems perform the selfcontrol conditions; it results that the entropic generator itself can be imagined as a complex system constituted by the reunion of at least two systems-one of them which determines the perturbations of entropic function $Z(H)$ and the other one which provides the inhibition of those perturbations $B(S)$ (see diagram 4).

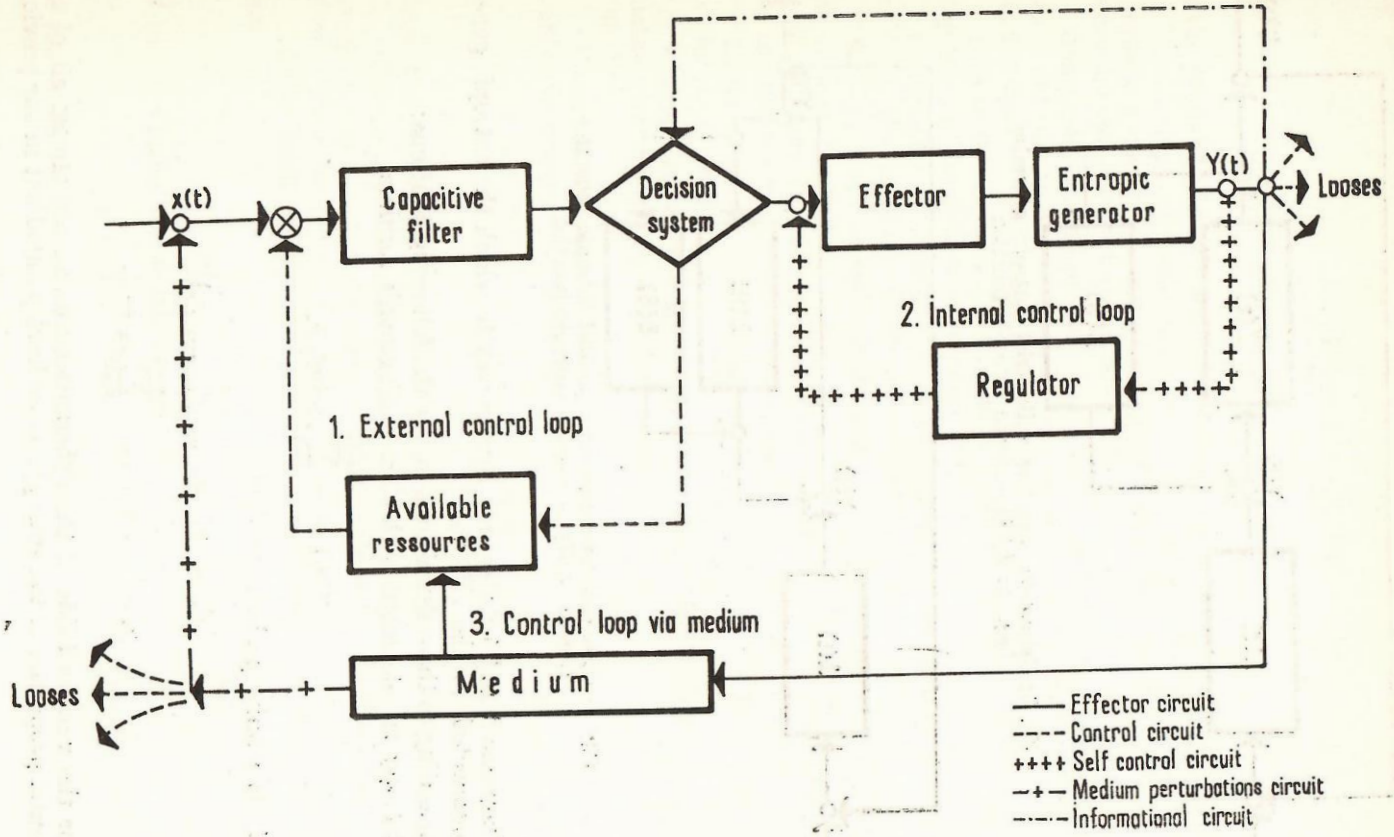

Fig. 2: General diagram of a cybernetic system

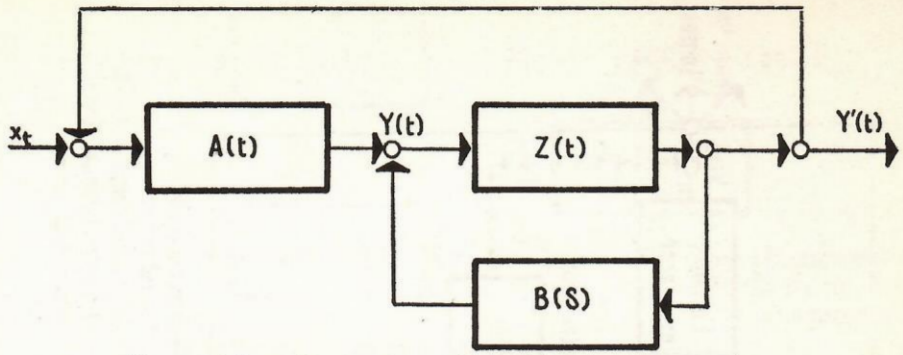

Fig 3: Cybernetic structure with serial entropic generator
Legend: $Z_s(H)$ — Serial entropic function

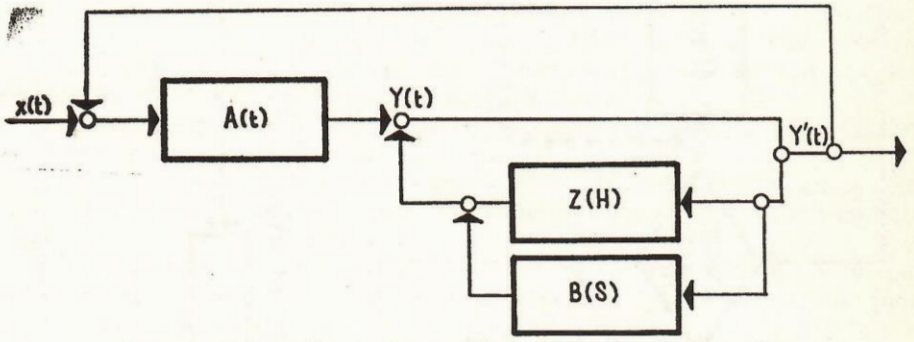

Fig. 4: Cybernetic structure with parallel entropic generator
Legend: $Z(H)$ — Parallel entropic function

Diagrams 3 and 4 differ only by the way in which the entropic generator is connected to the effector.

According to these definitions we use the following relations:

Entropy is calculated with Claude Shannon's formula

$$H(d_n) = -\sum_{k=1}^{k=n} p_k \log_2 p_k \tag{3}$$

where d_n is a finite probability field

$$d_n = (p_1, p_2, \ldots, p_k, \ldots, p_n)$$
$$p_k \geqslant 0 \quad 1 \leqslant k \leqslant n \quad \sum_{k=1}^{k=n} p_k = 1. \tag{A}$$

For the various fields of the cybernetics we can use almost all of the fundamental properties of the entropy, as we have pointed out in our previous works.

The *entropic function* for an irreductible cybernetic system is computed using the following formula:

$$Z(H)\left(\bigcup_{\alpha=1}^{\alpha=n} S_\alpha\right) = \sum_{\alpha=1}^{\alpha=n} H(S_\alpha)$$

$$\text{where } S = S_1 \cup S_2 \cup \ldots \cup S_\alpha \ldots \cup S_n \tag{4}$$

and the probability fields for the entropy of each system are *disjoint.*

For a complex cybernetic system, where conditional probabilities occur, the system's entropy is composed by the specific entropies of each system component and the link entropies.

Consequently, the problem can be solved graphically, adding the coordinates of entropy curves for each system, or analitically, after we have established a compatible relationship scheme for the components.

It is to be mentioned that always $Z(H)$ is a temporal function, because it depends on the system's temporal elements.

Concerning the mathematical expression of the general entropic function $Z(H)$, the author is in an investigation stage.

We can state approximately that if we know the output signals (Y) programmed for a time interval $t \in [0, T]$ and the actual output signals (Y') on the same time interval, then we can consider in a simplified assumption that the error $\varepsilon = Y \pm Y'$ is generated by the entropic function $Z(H)$.

Some practical experiments were carried out for industrial activities and for telecommunications and post services.

Without giving the general mathematical formulation of the entropic function, but supposing that it is known, we can point out some interesting properties.

From the diagrams 3 and 4 it can be seen that the selfcontrol function of entropic generator is given by:

$$g(H) = \frac{Z(H)}{1 \pm Z(H) \cdot B(s)} \tag{5}$$

where $B(s)$ represents the command for self organization of the system.

We can say that this system is perfectly organized when $Y = Y' \neq 0$, therefore $\varepsilon = 0$ and it does not contains internal perturbations; it is fully when $Y = Y' = 0$.

From these results the following semnification for the entropic function:

a) $B(s) = 0 \quad Z_{||}(H) = 0 \quad$ or $\quad Z_z(H) = 1$

is the condition for perfectly selfcontrol;

b) $B(s) = 0 \quad Z_{||}(H) = 1 \quad$ or $\quad Z_z(H) = 0$

is the condition for maximum disorder.

III. THE ENTROPIC FUNCTION AND THE ORGANIZATION DEGREE OF THE SYSTEM

From the two properties of the entropic function is results that if we apply a *bivalent logic,* then in all systems there is a certain level of entropy which represents their tendency to disorder functioning. If we consider that at a given moment $Z_0(H)$ represents the entropy of a standard system considered as satisfactorily organized and the entropy $Z_s(H)$ represents the entropy of the analyzed system at the given moment, than the degree of organization could be quantitatively expressed by the following relation:

$$G[s] = \frac{Z_0(H)}{Z_s(H)}$$

which can be applied when we have the analytical expression of the entropic function.

When this is not possible we can substitute the values of the entropies calculated using relation (4) i.e.

$$G[s] = \frac{H_0}{H(s)}.$$

In both relations the symbols are:
$G[S]$ system's $[S]$ organization degree

$$0 \leqslant G[s] \leqslant 1$$

$Z_0(H)$, H_0 — entropic function, namely the entropy of the standard system considered to be well organized; $Z_s(H)$, $H(s)$ entropic function — respectively the entropy of the analyzed system.

It is to be mentioned that in the case we use the entropy of the system, then relation (4) is corrected as follows:

$$H(s) = \frac{\sum_{i=1}^{i=n} \alpha_i H(s)_i}{\sum_{i=1}^{i=n} \alpha_i}$$

where (α_i) represents the weighting coefficient for each component system, which depend on his importance.

IV. APPLICATIONS

A first application of so called "entropic analysis method" was carried out in some entreprises belonging to the machine building industry. The cybernetic systems considered for the determination of the organization degree were the productive sections.

There were taken into account the following elements:

Probability fields	*Standard entropies calculated*
a) probabilities for breaking down manufacturing process due to lacking of continueus supply of the working posts	within 0.10 ; ... ; 0.3

b) probabilities for breaking down caused by labour deficiences — within 0.10;...; 0.20

c) probabilities for breaking down due to technological deficiencies. — within 0.05;...; 0.15

Using the calculated entropies for these probability fields we computed the organization degree for each production section.

We consider that standard entropies can be easily determinated so that this method could be applied for every type of industrial system.

A second application was carried out in order to get the quality of the postage services.

This experiment was done by dr. eng. Stefan P. Bebe Tudor for the Bucharest Post Office and was published in his Ph.D. Thesis.

Probability fields were the breakdowns in arrival of the mailing to the destination, delay elements, wrong mailing etc.

The methodology based on these researches is a very simple one and can be easily used by people with medium graduation by reading some nomogrames.

V. CONCLUSIONS

The present paper is only a primary introduction for those people which are interested in the huge possibilities offered by the entropy studies in the investigation of the cybernetic systems.

From our research it results that analytical expression of a general entropic function could generate large applications in various fields, including biology and medicine, which as we all know, work with heavy complexity elements.

The advantage of the association between the entropy (in informational meaning) and negative feedback of the selfcontrolling systems is that it allows an aggregation of different system categories.

The measure of the organization degree shows up the internal resources of the analysed system and offers the possibility for establishing some practical actions to improve the system efficiency.

For this reason we have directed our researches in different economic fields where the practical value of our method has been proved to be satisfactory.

REFERENCES

1. Beer Stafford: *The Cybernetics Cytablast: Management Itself*, Progress of Cybernetics — Gordon and Branch Science Publishers, London, 1969.
2. Birlea Stefan: *Entropy in the Industrial Cybernetics System.* Economic Computation and Economic Cybernetics Studies and Research, no. 2, Bucharest, 1960.
3. Birlea Stefan: *Inițiere în cibernetica sistemelor industriale.* Ed. Tehnică, București, 1975.
4. Georgescu Roegen Nicholas: *Analitical Economics.* Harvard University, Cambridge, Massachusetts, 1966.

5. Manea Mănescu: *Preocupări cu privire la tehnica elaborării metodelor cibernetice în economie.* Rev. ştiinţifică contemporană, Bucureşti, Ed. politică, 1968.
6. Moisil Grigore: *Elemente de logică matematică şi de teoria mulţimilor.* Ed. ştiinţifică, Bucureşti, 1966.
7. Nicolau Edmond: *Introducere în cibernetica sistemelor continue.* Ed. tehnică, Bucureşti, 1966.
8. Onicescu Octav: *Principes de logique et de philosophie mathématique*, Ed. Academiei R.S.R., 1971.
9. Zadeh L.A., E.Polack: *Teoria sistemelor.* Ed. tehnică, Bucureşti, 1966.

CERTAINES CONSIDERATIONS SUR L'ENTROPIE DANS LES SYSTEMES CYBERNETIQUES

L'hypothèse fondamentale, qui constitue la source du présent ouvrage, ainsi que des autres ouvrages antérieurs, réside dans le fait que par leur structure active, certains systèmes cybernétiques (systèmes effecteurs et systèmes de commande) ne peuvent être détachés du milieu avec lequel ils se trouvent en interdépendance permanente.

En conséquence, tout système cybernétique inductible constitue une réunion de trois systèmes (boîtes noires) unis selon le principe de la connexion inverse, dont l'un représente de façon obligatoire le milieu de contact.

De ce fait, le milieu constitue un système perturbateur qui, joint aux éléments perturbateurs spécifiques de l'intérieur du système, tend à desorganiser dans le temps le fonctionnement de la réunion cybernétique à laquelle ils appartiennent.

Pour trouver des modalités de détermination quantitative des facteurs perturbateurs on emploie l'entropie pour mesurer les performances négatives des systèmes.

Appliquant une logique bivalente, on considère que tous les systèmes contiennent un certain degré d'entropie qui signifie la tendance vers le desordre dans leur fonctionnement.

En fonction de cette tendance on définit l'état d'entropie et les fonctions entropiques propres aux différentes catégories de systèmes.

Sur la base des éléments théoriques énoncés, on présente les conclusions qui découlent de l'application de l'analyse entropique à certains systèmes industriels et des postes et télécomunications.

НЕКОТОРЫЕ СОБРАЖЕНИЯ ОТНОСИТЕЛЬНО ЭНТРОПИИ В КИБЕРНЕТИЧЕСКИХ СИСТЕМАХ

Основная гипотеза, из которой исходит что настоящая работа, как и другие предшествующие работы, состоит в том, что активная структура ряда кибернетических систем (эффекторные и командные системы) не могут быть ни в какой степени извлечены из среды, в которой они находятся в постоянной межзависимости.

Вследствие этого, любая кибернетическая индукционная система является соединением трех систем (черных ящиков), объединенных принципом обратной конексии, из которых одна представляет в обязательном порядке среду контакта.

По этой причине среда является пертурбантной системой, которая наряду с внутренними специафическими пертурбантными элементами системы, на протяжение времени стремятся дезорганизировать работу киберенетического соединения, к которому принадлежат.

В виду изыскания ряда способов количественного определения пертурбантных факторов используется энтропия как мера отрицательных достижений систем.

Применяя бивалентную логику считается, что все системы содержат определенный уровень энтропии, который обозначает тенденцию к беспорядку в их действии.

В зависимости от этого определяется энтропическое состояние и энтропические функции, свойственные различным категориям систем.

На основе изложенных теоретических элементов приводятся выводы, вытекающие из применения энтропического анализа ряда промышленных систем и систем почтовых и телефонных сообщений.

26. IX. 1978