N. COSTAKE, eng.
S. SCHÄCHTER, Dr. eng.

Preliminary Survey on the Building of a National Network of Electronic Computers

The present study presents the preliminary conclusions which resulted so far from the research carried out within the subject-matter included in the plan of the Centre of Economic Computation and Economic Cybernetics.

1. BRIEF INTRODUCTION TO THE PROBLEM

1.1. Our country's economy is of an integrated type, meaning that the plan targets and the methodological basis of economic recording and computation are unique, with the activities of all the economic units strongly intercorrelated. It results that the economic information system is also of integrated type, which necessarily involves the setting up of interdependent and not of diverse autonomous information sub-systems.

The technique of the transmission and processing of information has reached the stage at which integrated information systems can be created. The operational achievements known so far (see the examples in the Annex) refer, however, only to large capitalist enterprises, and consequently cannot be adopted as such, since:

a) — the programmes are written for different economic conditions and, implicitly, the necessary processing capacity will not be the same;

b) — they have a character of information sub-system (they do not refer to the activity on a national scale but to the level of large enterprises operate in conditions of competition).

Some data on the projects worked out in socialist countries are known (as for instance the project of the network of electronic computers of the U.S.S.R. and that of Czechoslovakia). It results from these projects that the line adopted is that of setting up hierarchized networks of electronic computers, observing in the main the administrative structure and envisaging the

setting of the computation centres on the principl of the service to a territory. This situation does not guarantee, at least evidently, the maximum economic level and the capacity of the necessary expansion, being also linked to organizing features.

1.2. The average cost of the equipment needed to the processing of information varies approximately proportionally to the logarithm of the computation speed which, in its turn, expresses in a first approximation, the processing capacity.

1.3. The requirements of a national network of electronic computers are in the main the following:

— economical character (important investments being involved);
— reliability in operation (the system being of national importance, a defective running could have serious repercussions);
— modularity (the system can be set up only on successive stages, in step with the analysis of the applications).

2. PREMISES CONSIDERED IN PROPOSING THE SOLUTION

In proposing the solution, one has to proceed from the following premises:

2.1. The technical solution must be based on a functional scheme.

2.2. An economical character should be obtained with a minimum number of equipments of corresponding capacity, the two other requirements being at the same time observed:

— high reliability in operation;
— modularity.

2.3. The economic units to be served are divided in the following categories:

2.3.1. — units with a big volume of own information and critical dynamic conditions, which will require consequently their own endowment with electronic equipment (as for instance iron and steel aggregate works);

2.3.2. — units with a big volume of own information but lacking critical dynamic conditions, which could be served by territorial computation units, at periodical rates (as for instance the building sites);

2.3.3. — units with small volume of information, to which the ensuring of periodical access to computation units or to equipments of information transmission would be sufficient (as for instance the State farms).

2.4. The major information processings are divided in the following categories:

2.4.1. the prospective (superior) direction — the drawing of long-range programme plans (over 5 years, for instance);

2.4.2. planning — the drawing of short-range plans (as for instance up to 5 years and phased per years);

2.4.3. operative direction — the management of the economic processes in keeping with the short-range plans;

2.4.4. the estimation of the stage and performances — the collecting of data and their presentation in a form available immediately;

2.4.5. technical and scientific computation — processing of varied information, the data being received in an aleatory rhythm, as the computation is not urgently required.

2.5. There must be a single circulation of information between the diverse sub-systems, of a minimum volume (management by way of exception).

2.6. It is necessary to specify, at least generally, a unitary conception and, hence, a final solution, involving the study of the most suitable plan for the realization of the integrated system proposed finally, proceeding from the initially given situation.

2.7. The endowment of the economic units with conventional equipment is continued; the proposed system of information processing supposes the ensuring of a collection of accurate data. In the description that follows and in the computation this aspect has not been taken into consideration, since this involves a necessary action, irrespective of the solution adopted for the network of electronic computers.

From the technical point of view, adequate seems to be the orientation towards the conventional equipment which secures the production of punched tape (in cases when the needs of eventual remote transmission are prevalent), or of stylized symbols, adapted to the automatic optic symbol reading (in the rest of cases). In the present study, the conventional equipment appears as an initial component of the whole system of data processing and transmission, the conclusions referring to the organization of the network of electronic computers being relatively dependent to a lesser degree on the type of the chosen conventional equipment,

2.8. With regard to the endowment with equipment for the processing of information, the question entails the securing of the needed computation services with minimum of expenses on the economy as a whole, and not in securing the own equipment with minimum of expenses for each considered economic unit.

3. SHORT PRESENTATION OF THE PROPOSED SOLUTION OF PRINCIPLE

3.1. The principle of programming the processing of information.

The processing of information is proposed to be organized on a major cycle, according to Fig. 1. The management by way of an exception, is proposed to be achieved in compliance with the algorithm in Fig. 2.

The main information processings are considered as being formed of open programme systems, (type OPS), in the main:

— *higher management*: simulation programmes, mathematical programming, PERT, provisional programming, etc.;

— *planning:* diverse methods of mathematical programming, RAMPS, the division of products per materials and cycles, etc.;

— *operative management:* division of products per materials and subassemblies, algorhitms of optimization, algorithms specific to the economic unit, statistical surveying, etc.;

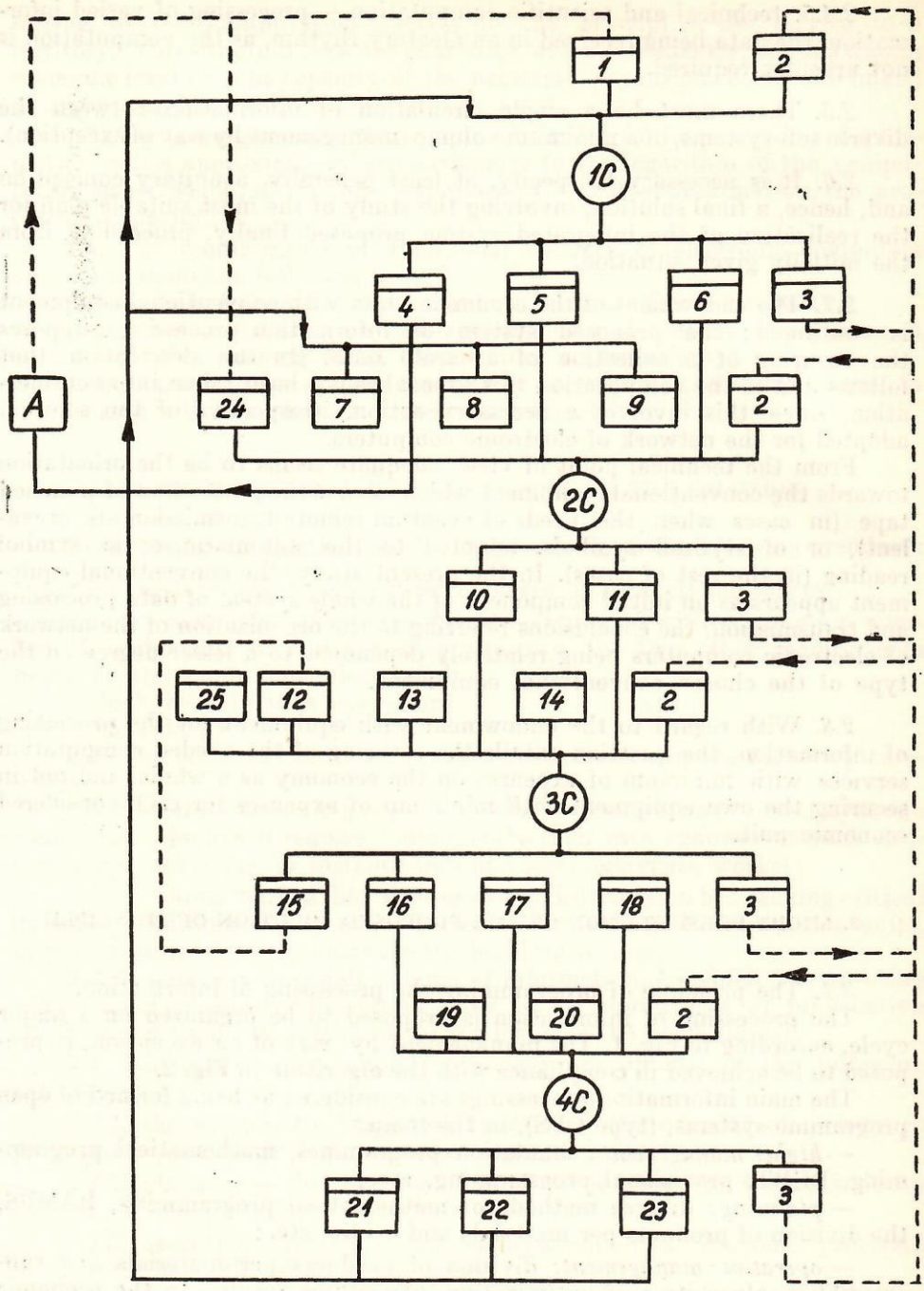
1
2
1C
4
5
6
3
A
24
7
8
9
2
2C
10
11
3
25
12
13
14
2
3C
15
16
17
18
3
19
20
2
4C
21
22
23
3

Fig. 1

Sequences of information

1. Expected economic indicators
2. Corrected exceptions
3. Exceptions
4. Probable economic indicators
5. General plan for the use of resources
6. General plan for finding resources
7. Achievements
8. Existing resources
9. Detailed mathematical models of the economic system
10. Detailed plan for the use of resources
11. Detailed plan for finding resources
12. Achievements of the economic unit
13. Mathematical model of the economic unit
14. Resources of the economic unit
15. Plan of the economic unit
16. Report on the achievements of resources
17. Report on the use of resources
18. Report on the mathematical model
19. Diverse internal statistical data
20. Diverse external statistical data
21. Existing resources of the economic system
22. Existing mathematical models of the economic system
23. Existing economic indicators of the economic system
24. Economic agreements
25. Foreign orders

Processing of information

1 C — management policy
2 C — planning
3 C — operative management
4 C — estimation of performance of economic system

Special symbols

A — higher management of the economic system

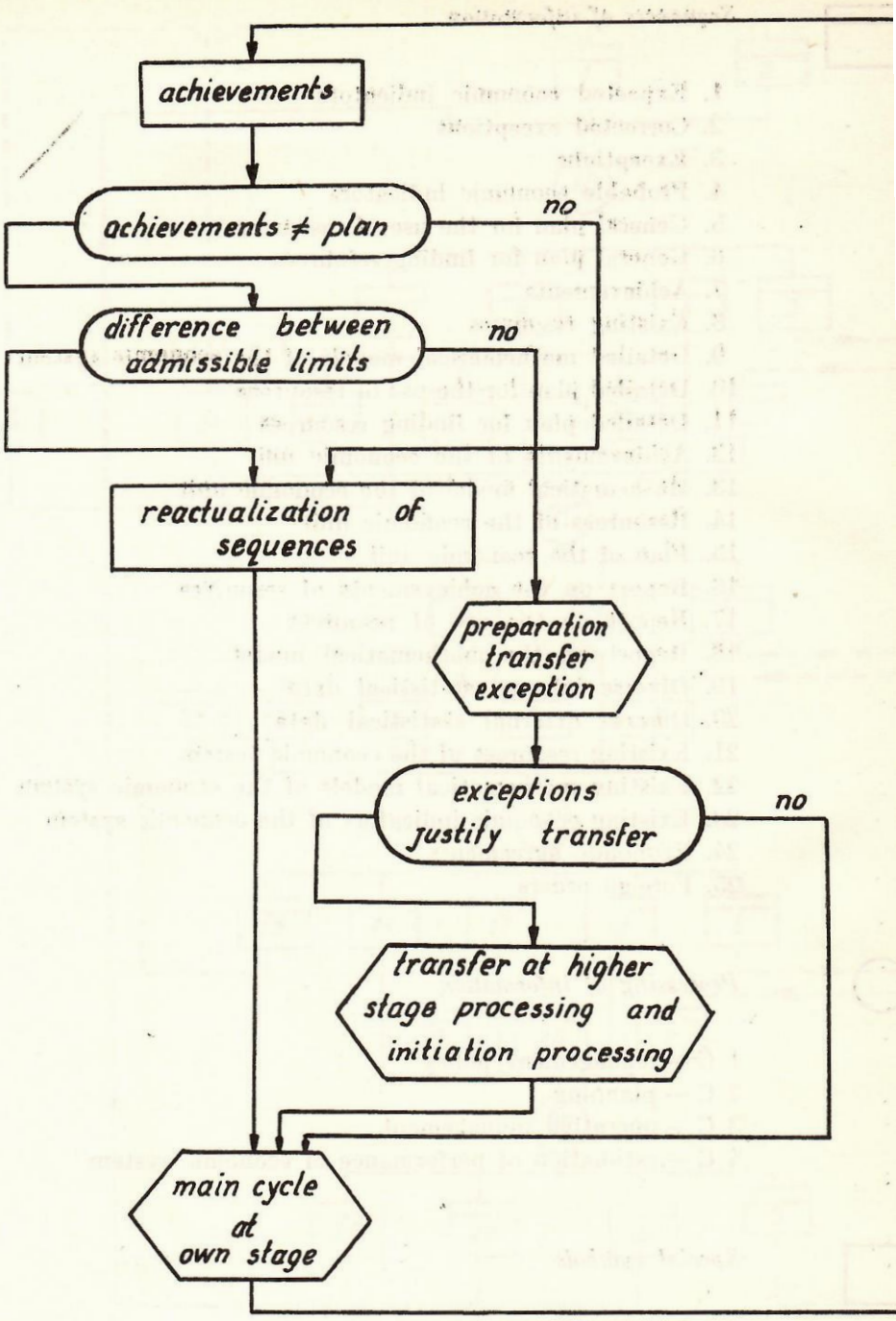
achievements
achievements ≠ plan
no
difference between admissible limits
no
reactualization of sequences
preparation transfer exception
exceptions justify transfer
no
transfer at higher stage processing and initiation processing
main cycle at own stage

Fig. 2

— *estimate:* diverse statistical algorhitms (filterings, correlations, regressions, simulations, statistical tables, *etc.*).

3.2. Equipment

The project of the endowment with information processing equipment

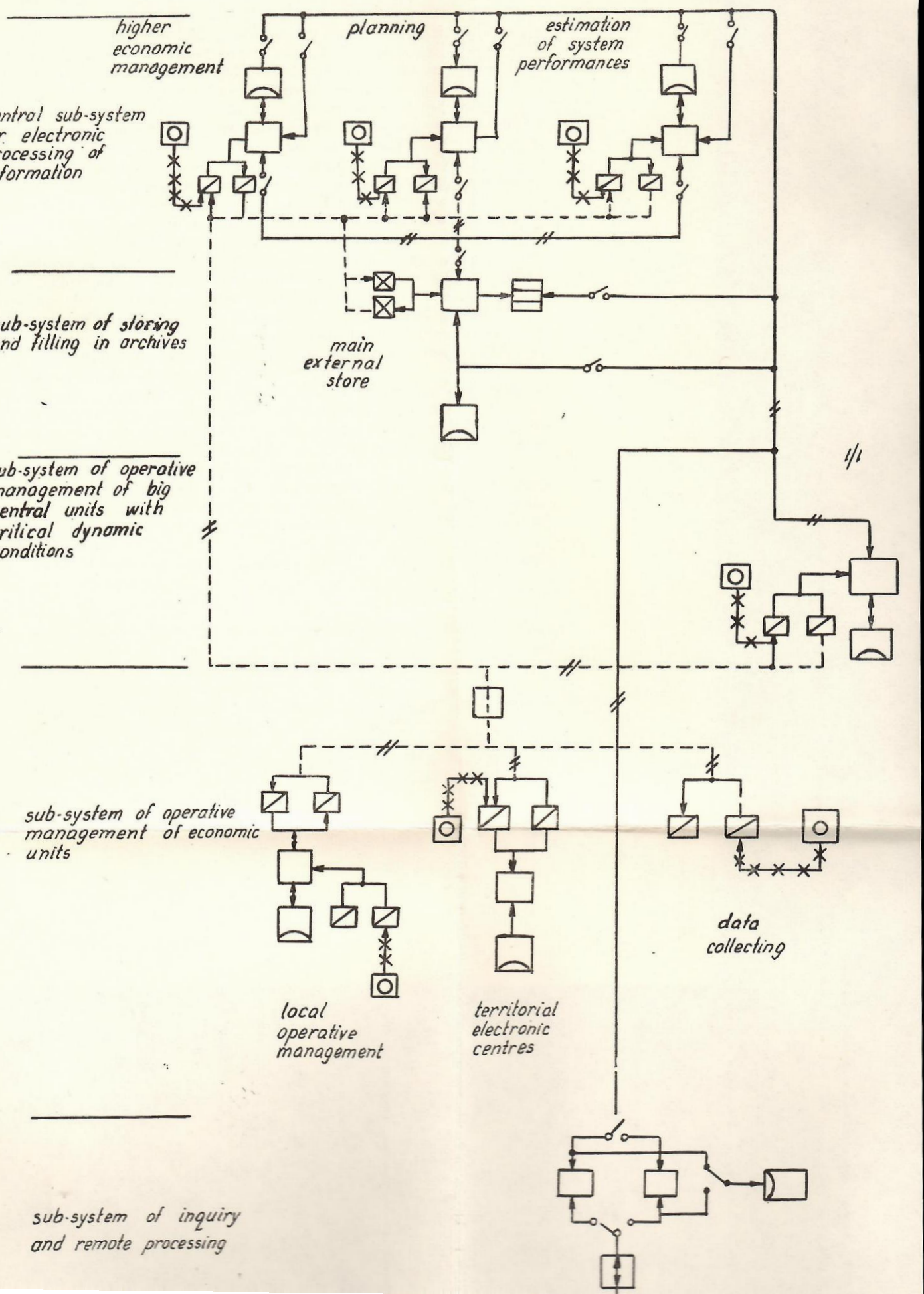

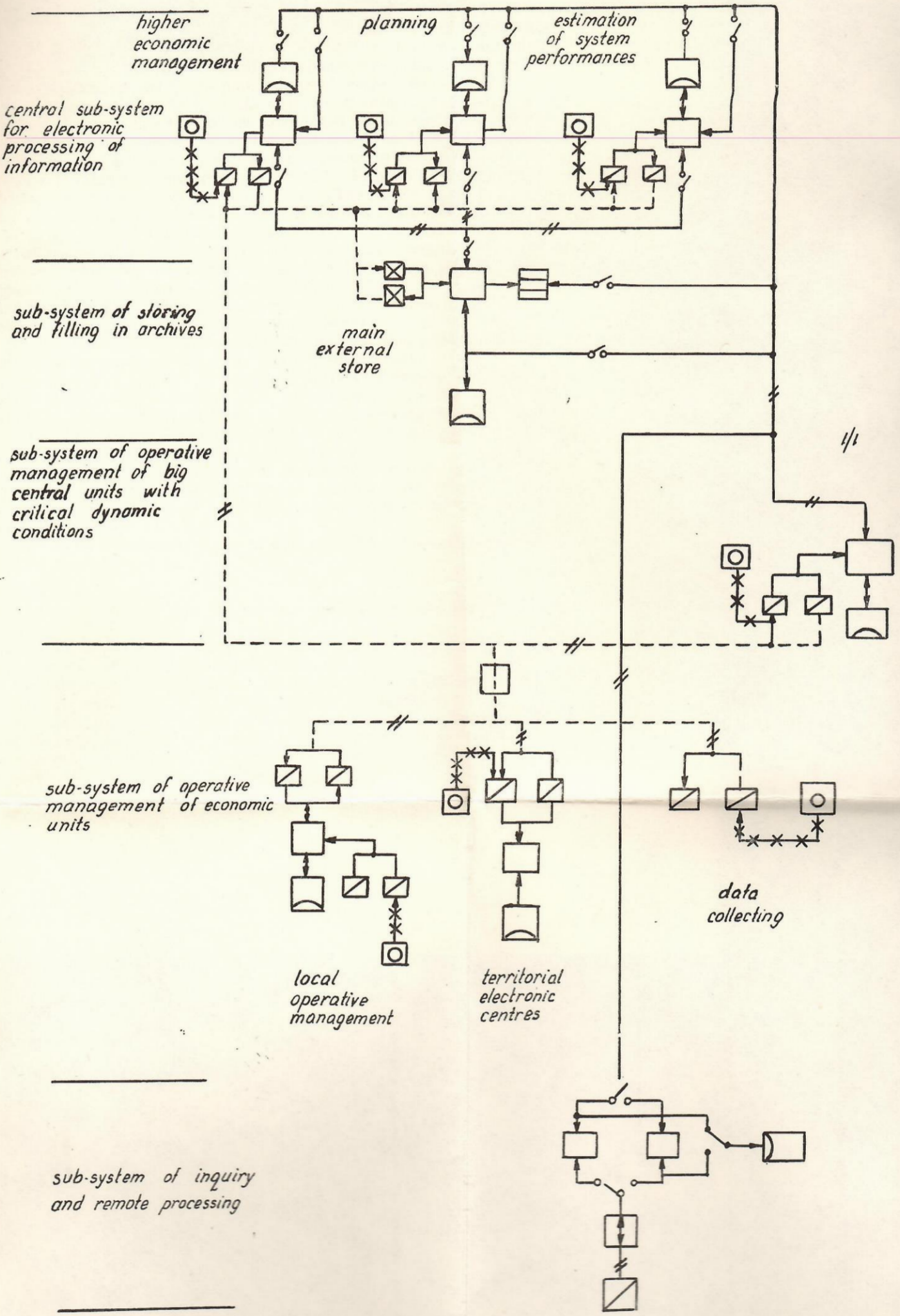
higher economic management
planning
estimation of system performances
central sub-system for electronic processing of information
sub-system of storing and filling in archives
main external store
sub-system of operative management of big central units with critical dynamic conditions
1/1
sub-system of operative management of economic units
local operative management
territorial electronic centres
data collecting
sub-system of inquiry and remote processing
central unit
external store
automatic archives
data transmission equipments
inquiry units

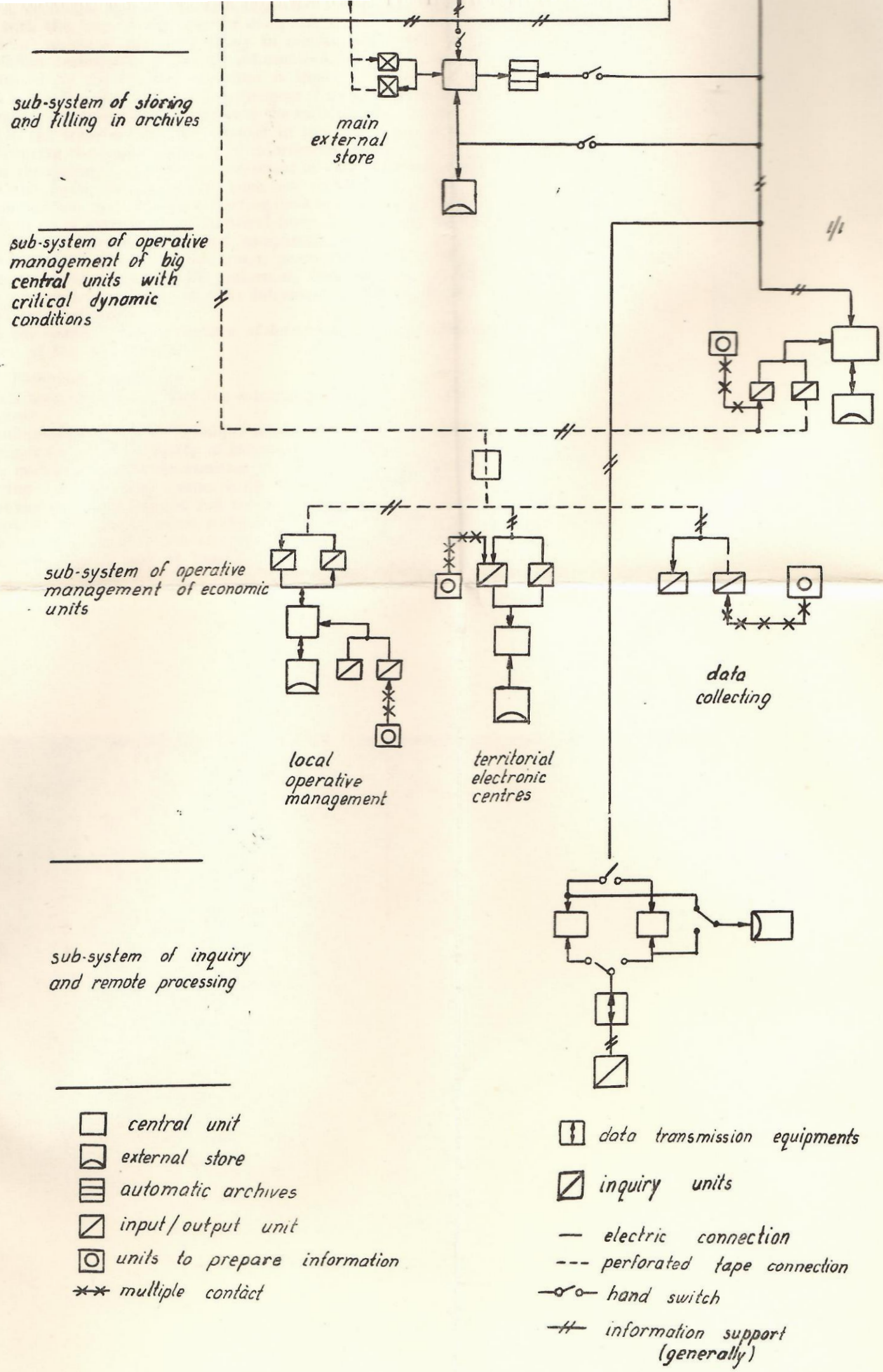
sub-system of storing and filling in archives
main external store
sub-system of operative management of big central units with critical dynamic conditions
sub-system of operative management of economic units
local operative management
territorial electronic centres
data collecting
sub-system of inquiry and remote processing
central unit
external store
automatic archives
input / output unit
units to prepare information
multiple contact
data transmission equipments
inquiry units
electric connection
perforated tape connection
hand switch
information support (generally)

Fig. 3

— *estimate:* diverse statistical algorhitms (filterings, correlations, regressions, simulations, statistical tables, etc.).

3.2. Equipment

The project of the endowment with information processing equipment is proposed according to Fig. 3, the transfer of information between the main computers proceeding in compliance with the data in Fig. 4.

The proposed endowment project includes:

a) *a sub-system of information processing* formed of three electronic computers of large capacity, destined to the functions of higher management planning, operative management and estimate respectively, having access to a big capacity external memory (the main external store) through the instrumentality of a computer controlling the transfer of information. As a rule, all the data of the economic system are introduced by means of the transfer control computer in the main external store and next transferred to the computer calculating the performances of the economic system (estimate). The results yielded by this computer are transferred to the main external store in a zone of access to the other two computers, a.s.o. The results needing a transfer to the economic system are also transferred to a data teletransmission system, with the help of the transfer computer;

b) *a sub-system of automatic filing in archives* (by using, for instance, the microfilm technique) where all information introduced and, respectively, released by the transfer computer is kept;

c) *a sub-system of operative managemement of the big central units* with critical dynamic conditions (as for instance the railways, foreign trade) which is coupled to the transfer control computer in the first sub-system, with the aim of ensuring the rapid exchange of information needed;

d) *a sub-system of operative management of own electronic computers of the economic units*, which justify such an endowment, centres of territorial computation and units for collecting data and receiving the local results (destined to units extremely little critical from the dynamic point of view, such as the agricultural production co-operatives);

e) *a sub-system of inquiry and remote processing* linked to the first subsystem by transfer computers, for performing technical and scientific computation or rapid integration of some information from a reserved zone of the main external store;

f) *a sub-system of teletransmission of data* needed to ensure the transmission speed of the information.

3.3. Technical advantages

It has been appreciated that the solution proposed enables the following advantages:

— minimum endowment (a unique scheme, to ensure a minimum number of equipments for the processing of information);

— a minimum flow of transmitted information (specialized sub-systems transferring the processing, respectively reduced information);

— favourable cost indexes and reliability (the scheme is based on few large capacity computers, whose number is however enough to secure reliability in operation, and which can eliminate themselves reciprocally, by channel switching in case of breakdown);

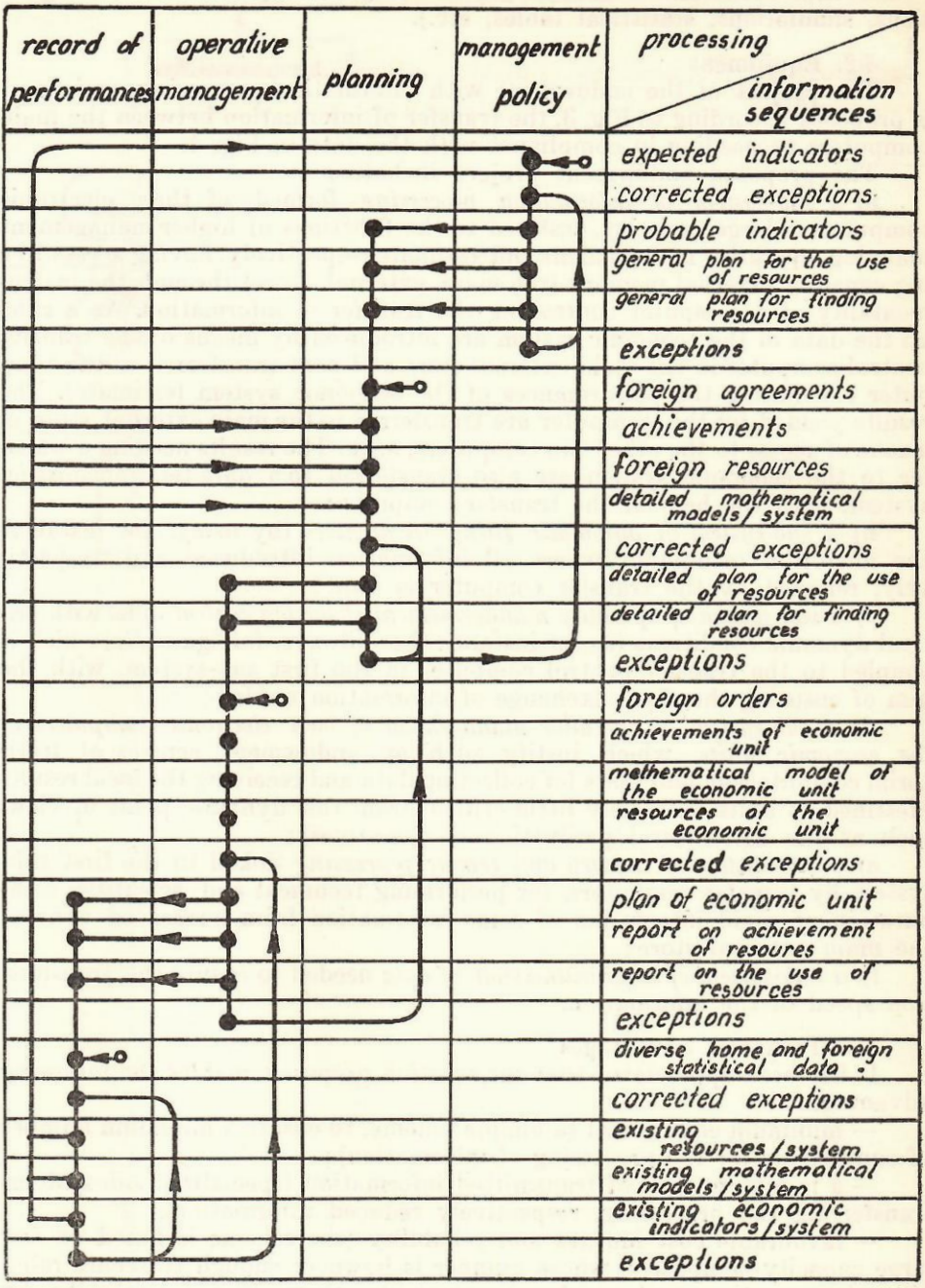
record of performances
operative management
planning
management policy
processing information sequences
expected indicators
corrected exceptions
probable indicators
general plan for the use of resources
general plan for finding resources
exceptions
foreign agreements
achievements
foreign resources
detailed mathematical models / system
corrected exceptions
detailed plan for the use of resources
detailed plan for finding resources
exceptions
foreign orders
achievements of economic unit
mathematical model of the economic unit
resources of the economic unit
corrected exceptions
plan of economic unit
report on achievement of resoures
report on the use of resources
exceptions
diverse home and foreign statistical data
corrected exceptions
existing resources / system
existing mathematical models / system
existing economic indicators / system
exceptions

Fig. 4

— reserve of expansion (new units can be added, the capacity of the existing units can be increased without affecting the running of the systems);

— an as best as possible functional organization (directed towards the meeting of requirements).

Obviously, the proposed system requires, as a condition to high economic efficiency, a correct collecting of information and the correct use of results.

3.4. Relation to the administrative system

The system proposed does not impose particular conditions to the administrative system, as it is a technical means at its disposal. It is expected to see the administrative system affected only to the degree in which the access to the system store, in other words the processing capacity, proceeds with new technical means and in conditions of increased performances, the premises of an administrative activity based on study being thus created. It stands to reason that the integration of the proposed system would proceed gradually, starting with quite simple problems which would however present a relatively high efficiency (as for instance PERT).

3.5. The problem of other studies

Study work is now under way on the endowment of industrial units and departments. The adoption of a unitary conception from the very beginning is imperative, with the risk that by adopting an "autonomous" endowment, the investment would not be profitable as a whole.

3.6. The problem of assimilation of computation means

The problem of unattainable performances in this country is not raised at a relatively large number of central units. It is however necessary to define from the start the technical conditions of the equipment that should ensure the compatibility of the network as a whole. This asks for a supplementary study stage.

4. SHORT INFORMATIVE TECHNICAL AND ECONOMIC APPRECIATIONS

4.1. Informative dimension elements

From the analysis based on the parameters of the statistical informatory system, the IPA (the Institute of Automation) projects, the technical conditions referring to the Ministry of Mail telecommunication system and from data of technical literature, it results: *

— the volume of information that would have to be transmitted between the economic units and the central processing sub-system, etc. of below 200 M car/day. This volume represents the capacity of about 10 musical channels. It results that the transmission of the information flow could not raise, as a rule, major problems and conventional solutions—as for instance the transmission by punched tape — might be adopted.

— the priority breaking period of the transfer computer: some 1 ms.

— the main store of the system ranging to the magnitude of 10,000 M car.

---

* Only synthetical results are given so as not to enlarge the volume of the study.

— the necessary speeds of the system's central units would be as follows:
— the central sub-system: over 100,000 operations per second;
— the transfer computer: over 100,000 operations per second;
— the sub-system of operative management of the big central units: some 100,000 operations per second;
the sub-system of operative management (own equipment): 25,000 ... 50,000 operations per second;
idem (territorial centres): 50,000 .... 100,0000 operations per second,
the sub-system inquiry and remote processing: some 10,000 operations per second.

4.2. Main economic indicators of the proposed system:
— the number of central units: some 80 (about 4 units to one million inhabitants, as against some 10 on the average in the industrially-developed countries);
— average investment per unit: about 20 million lei, as against the world average of some 6 million lei (it involves a quite small number of relatively strong equipment);
— the value of total investment: some 2,500 million lei;
— the ratio electronic equipment/total investment: some 50 per cent (the rest of 50 per cent is represented by conventional means necessary to the proposed system, other investment);
— annual expenses: some 400 million lei yearly.
The data referring to expenses have been computed taking into account the known average prices of the electronic equipment, the schemes of usual organization, as well as the indexes used currently in the technical and economic studies.
— annual economic effects: minimum 1,000 million lei per annum.
The sources of economic effect considered in the computation are:
— the *growth of the production capacity* by some 5 per cent (over the 15 per cent reserve appreciated in the literature, which agrees with the results of the analyses carried out within the Ministry of the Machine-Building Industry), as a result of a better use of the equipment following planning and its more efficient checking up;
— the *increase of benefits* by some 5 per cent (given in the literature as a result of the possibility of cutting down cost price);
— the *shortening of the commisioning terms* of the new industrial projects, as a result of a more efficient operative planning (as for instance the use of the PERT and RAMPS methods);
No other sources have been taken into account, as for instance:
— the elimination of the badly used means of production;
— the optimization of plans;
— the optimization of stocks;
— the increase of the export competitiveness;
— the more efficient use of the means of payment;
It has been appreciated that the annual economic effect taken into consideration thus assumes a protective character:
— investment pay off time: some 3.5 years;
— necessary specialists: some 4,000.

4.3. The placing of the proposed system in comparison with the territorial hierarchical sub-systems

Provided that the situation involving the setting up of a territorial network for each branch of the economy is accepted, a project of the following type will be obtained:

— at least one central, large capacity, computer for co-ordination;

— an own sub-system for each economic branch (involving medium-size or small-size capacity computers);

— the number of central units: some 150;

— average investment per unit: approximately 15 million lei;

— the value of total investment: some 3,500 million lei;

— the relation electronic equipment/total investment: some 65 per cent;

— annual expenses: 500 million lei yearly.

It must be stated that these average data result from the replies given by departments concerning the immediate and prospective stock of electronic computers needed, within the Institute of Automation inquiry for the technical and economic study on the assimilation for production of electronic computers;

— annual economic effects: some 1,000 million lei/yearly (the question is at issue, since the flow of information is high, while the integration degree more reduced);

— the investment pay off time: some 7 years (beyond the accepted allowable value of 5 years);

— necessary specialized staff: some 7,000.

It results most conspicuously that the solution proposed is more advantageous.

5. — CONCLUSIONS

An analysis of the two main variants: an integrated system of information processing and a system of information processing made up by hierarchical sub-systems, clearly shows that the first variant is more profitable and more efficient.

Annex

SOME ACHIEVEMENTS OF INTEGRATED INFORMATION SUB-SYSTEMS KNOWN SO FAR

1. Olivetti — Italy (The San Bernardo d'Ivrea works).
2. Lockheed — U.S.A. (The group of works)
3. Westinghouse — U.S.A. (The group of works and commercial branches).
4. Richard Thomas & Baldwin — Great Britain (The iron-and-steel works).
5. Honeywell — U.S.A. (The Greefort micro-contact works)
6. General Electric — U.S.A. (Own programmes and the chain of computation services).
7. Massachusetts Institute of Technology (The MAC project).
8. Sage — U.S.A. (The semiautomatic antiaircraft defence of the territory).

SUGGESTIONS CONCERNANT LA CREATION D'UN RESEAU NATIONAL DE CALCULATEURS ELECTRONIQUES

Cet article fait connaître le niveau actuel des recherches dans le cadre du thème figuran dans le plan unique de recherches scientifiques pour 1966—1970.

On expose brièvement les données du problème et les réalisations sur un plan mondial, et on atteint la conclusion que l'une des conditions nécessaires est que le réseau de calculateurs électroniques forme un système intégré.

On propose une solution pour un système intégré d'interprétation des informations et on donne des indications concernant la programmation, la constitution et le fonctionnement de ce système.

On effectue un bref calcul technique et économique et on arrive à la conclusion que la solution préconisée a des paramètres favorables en comparaison à d'autres solutions, respectivement un système basé sur des réseaux départementaux de calculateurs électroniques, coordonnées par un calculateur central.

On propose, en conclusion, d'adopter la solution suggérée, comme guide pour les travaux lutérieurs.

ПРЕДЛОЖЕНИЯ ОТНОСИТЕЛЬНО СОЗДАНИЯ НАЦИОНАЛЬНОЙ СЕТИ ЭЛЕКТРОННЫХ ВЫЧИСЛИТЕЛЬНЫХ МАШИН

Эта работа показывает современную стадию исследований в рамках темы, намеченной в сводном плане научных исследований на 1966—1970 годы.

Коротко представлены данные проблемы и достижения в международном плане и дается вывод, что одним из необходимых условий является объединенная система электронных счетных машин.

Предлагается решение единой системы обработки информаций и даются указания относительно её программирования, составления и функционирования.

Делается короткий технико-экономический расчет, который приводит к выводу, что предложенное решение имеет благоприятные параметры по сравнению с другими решениями, особенно система, основанная на ведомственной сети электронных счетных машин, координируемых центральной счетной машиной.

В конце предлагается принятие решения как линии для последующих работ.