C. CHIRICĂ
C. FABIAN
G. WEISZ

Solving Problems of Large-Extension Linear Programming by the Dantzig-Wolfe Decomposition Method on the Electronic Computer Elliott 803-B

Before proceeding to the elaboration of the model for a large-extension linear programming problem, it is necessary to know the solving method, choose the sequence of variables and restrictions as well as the measure units.

Early in 1965 the Institute of Energetics under the Academy of the Socialist Republic of Romania posed the problem of solving the mathematical model of the optimization of the National Power Balance on the Elliott 803-B computer of the Hunedoara Iron and Steel Aggregate Works. At that time the experience in solving such problems was scanty, as the computer had been put into service only in the autumn of 1964, and the programmers were engaged in shaping the requisite programmes for solving pressing problems of the Works.

With support from the Works management that allowed surveying and investigation on the computer in its off-service hours, a group of programmers started work on selecting the most suitable method and the elaboration of the algorithm required by the computer, and also of a methodology for solving the above-mentioned problem. The mathematical model aim covered a number of 1003 variables liable to 313 linear restrictions, with the of seeking the optimization of the cost function. The solving of the problem was successfully completed in January 1967.

In this survey we give the principal stages in this solving and the special issues and difficulties arisen.

★

The library of the computer's original programmes, drawn up by the building firm, covers a linear programming schedule based on the "-M" (Wagner) method. This method is advantageous in solving problems of small extensions, especially in the cases when the mathematical model has no, been sufficiently studied, spotlighting the erroneously expressed restrictionst which lead to incompatibility.

In the case of extensions, the method leads to serious difficulties following the need for introducing arbitrary factors, and also the cumbersome way of introducing the data and of obtaining the results for interpretation.

As the specialty literature does not contain adequate methods for solving models of the extension of that one for the optimization of National Power Balance on computers with such performances as the one at the Works and as, in general, no precise details are given as to the already solved problems of such extensions, there was a previous study of the more frequently used methods and the advantages of each of them.

From the studies carried out it accrued that two methods can be eventually used as subroutines in the framework of a special solving method for large-extension problems with a particular structure of the matrix. The two methods are known in literature as "Revised Simplex" and "Modified Simplex". These methods present special advantages both as to the number of engaged cells in electronic computing and the number of operations. The work body of Hunedoara devised 4 programmes by these methods, notably one for the internal memory operation of the computer and three for tape external memory operation.

In view of certain peculiarities of the Hunedoara computer with regard to the way of introducing and extracting the data and the results, which might subsequently be used with data for a new problem, it was noted that the "Modified Simplex" method required more detailed supplementary information in the case of problems like that which was posed for solving.

The extension of the system which can be programmed on a computer with memory of a given capacitance is determined by the number of cells that can be assigned to the matrix proper. Since the operations being performed when drawing up a simplex table are in general the same, we can consider that the length of the programme does not differ substantially for the different variants of the simplex method and hence neither the number of cells assigned to the programme does.

When noting by a the number of variables, by b the number of restrictions, of which p inequalities with lesser sense, q equalities and r inequalities with larger sense, we obtain the necessary amount of work cells for the simplex tables as follows:

— For the "Modified Simplex" method

$$(a + r + 2) \times (b + 3)$$

— For the "Ordinary Simplex" method

$$(a + r + b + 3) \times (b + 4)$$

— For the "Revised Simplex" method

$$(p + q + r + 2 + 3) \times (b + 3) + (a + p + 2) \times (b + 2)$$

It obviously results that in certain cases the advantage obtained following the employment of the modified simplex method is appreciable. Moreover, as the operations on most of the matrix elements are identical in all the three methods, and as the matrix used for modified simplex method is smaller, the number of operations will be smaller too. In consequence of the study done, the modified simplex method was chosen, as it was considered that this was the most efficient one, and a programme was achieved, which allows the solving of a linear programming problem of maximum extension of the matrix of 6600 elements.

In order to obtain smallest possible times and increased accuracy in problems of large extensions, artifices were used in the programming scheme. So:

— Since for the effecting of phase I, the vectors corresponding to equalities had to be eliminated from the artificial basis, and once eliminated their non-return ensured, in determining *max.* ΔZ_j the programmers first consulted a list of the variables labels. This led to a reduction of the list of comparable terms and to a concomitant ensuring of a smaller number of iterations.

In drawing up the new simplex table the computation was carried out on column. In this way a number of columns, namely the labelled ones, after having been eliminated from the basis, do no longer influence the rest of the computation or the final solution. For this reason, after checking the label prior to the computation, the passage to another column does not imply any operation.

— The number of operations was reduced also by non-execution of the computation with the column that has the element of the generating line equal to zero.

— Since the order of dimensions in a problem of linear programming of the different elements cannot, in general, be assessed previously, the programme has been devised in mobile comma, which, allows of computation with figures between -5.8×10^{76} and $+5.8 \times 10^{76}$, the relative error of the operations being 2^{-29}.

The methods of using the tape external memory have proved inadequate. Thus, attempts done on the computer showed that the ensuring of the continuous operation of the external memory for a long time is not possible, and in the case of consideration of the problem as an indivisible entity the necessary precision is not secured.

Although originally the conclusion was reached that the solving of some problems of large extensions, by the aforesaid methods, is not possible by employing the Elliott 803-B computer — a conclusion also confirmed during the discussions with foreign experts at the colloquy on the theory of convex functions with application to numerical computation, held in Cluj in 1965 — subsequent research has led to the elaboration of a methodology to enable the solution of such problems on the above-mentioned computer by using as a basis the documentation method set out by G. Dantzig and P. Wolfe. This method consists in the decomposition of the problem in blocks

the iterative solutions of which generate a connecting problem. Figure 1 features the decomposition in blocks of a problem of large extensions.

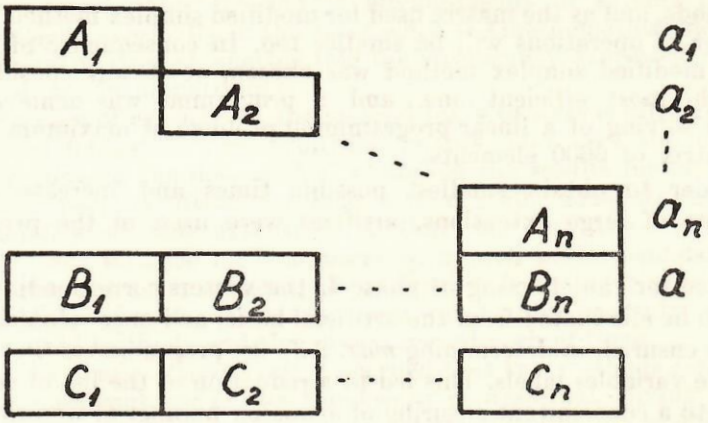

Fig. 1

where

A_j matrix of $m_j \times n_j$ elements
B_j matrix of $m \times n_j$ elements
C_j vectors with n_j elements
a, a_i vectors with m, m_j elements, respectively.

The problem illustrated in figure 1 has $\sum_j n_j$ variables, $m + \sum_j m_j$ restrictions and can be stated as follows: find the vectors $X_j (j = 1,..., n)$ that satisfy restrictions

$$A_j X_j = a_j \qquad (j = 1,..., n) \tag{1}$$

$$\sum_j B_j X_j = a \qquad \text{and} \tag{2}$$

$$X_j \geqslant 0 \qquad (j = 1,..., n)$$

minimizing the linear form

$$\sum_j C_j X_j. \tag{3}$$

Hence the problem consists of n subproblems and a connecting problem. Let

$$S_j = \{X_j \mid X_j \geqslant 0,\ A_j X_j = a_j\} \tag{4}$$

and

$$W_j = \{X_{j1}, ..., X_{jk_j}\} \tag{5}$$

the set of the extreme points of the convex polyhedron S_j. It is evident that any solution to the problems (1) is a convex combination of the W_j elements.

The connecting problem (Fig. 2) is defined by generalized vectors:

$$\left.\begin{aligned} P_{jk} &= B_j X_{jk} \\ C_{jk} &= C_j X_{jk} \end{aligned}\right\} \text{ for } k = 1,..., k_j, \tag{6}$$

and to be found are

$$S_{jk} (j = 1,..., n;\ k = 1,..., k_j)$$

which satisfy

$$\sum_{j,k} P_{jk}S_{jk} = a,\ S_{jk} \geqslant 0 \text{ (for all } j,\ k) \tag{7}$$

$$\sum_{k} S_{jk} = 1 \text{ (for all } j) \tag{8}$$

and minimizes the linear form (figure 2)

$$\sum_{j} {}_{k} C_{jk}S_{jk} \tag{9}$$

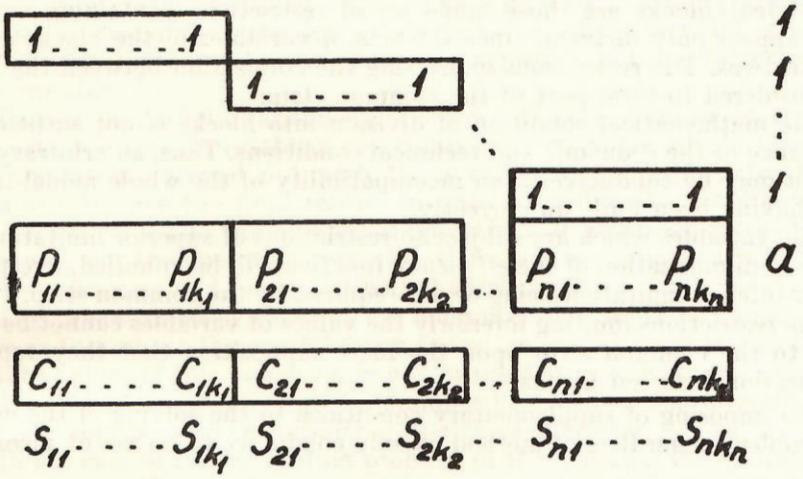

Fig. 2

The solution to the initial problem is obtained

$$X_j = \sum_{k} X_{jk}S_{jk}\ (j = 1, \ldots, n) \tag{10}$$

Hence it is necessary to determine the set W_j which generates problem (7), (8), (9), and with a solution to this and set W_j the solution to the original problem is obtained.

The decomposition algorithm is achieved in iterative steps as follows: The linear forms are minimized:

$$(C_j - \pi B_j)\ X_j \tag{11}$$

under the conditions

$$A_jX_j = a_j \tag{12}$$

$$X_j \geqslant 0, \text{ for all } j$$

where the vector π is defined by the relation:

$$\pi P_{jk} + C_{jk} = 0 \tag{13}$$

P_{jk} being at the respective iteration the vectors of the basis.

Let $\bar{X}_{j_0}$ be the solution for which

$$\delta = (C_{j_0} - \pi B_{j_0})\ \bar{X}_{j_0} - \pi_{j_0} = \min_{j}. \{(C_j - B_j)\ X_j - \bar{\pi}_j\} \tag{14}$$

If $\delta < 0$, a vector of the form

$$(B_{j_0}X_{j_0}, 0, ..., 1, ..., 0) \text{ and } C_{j_0}X_{j_0},$$

is generated, which is introduced in the basis of the connecting problem. If $\delta \geqslant 0$, the algorithm is completed and the solution to the initial problem is combined on the basis of formula (10).

The Dantzig-Wolfe method is applicable to the models allowing matrix division into independent blocks, according to the scheme in figure 1. Independent blocks are those made up of restrictions containing variables which appear only in them, since the sets of variables of the blocks are disjunct in twos. The restrictions expressing the connection between the blocks are considered to form part of the common strip.

The mathematical condition of division into blocks is not sufficient for observance of the economic and technical conditions. Thus, an arbitrary block division may be conducive to an incompatibility of the whole model in spite of its having been built up correctly.

The variables which are subject to restrictions of superior limitation only in case of minimization of the efficiency function will be annulled, irrespective of their inferior limitation being or not required by the common strip. In such case the restrictions limiting inferiorly the values of variables cannot be transferred to the common strip upon the mere supposition that they represent a connection between blocks.

The imposing of supplementary conditions to the solving of the connection problem, regardless of method, is only conducive to a case of incompatibility.

The Dantzig-Wolfe method proposes throughout the work period the "Revised Simplex" algorithm, for solving both the blocks and the connection problem.

By observance of the strictly mathematical conditions as well as of technical and economic conditions in carrying out block division, in the case of our problem matrices with dimensions ranging between 3,000 and 6,500 elements have been obtained. The "Revised Simplex" algorithm programmed for the computer does not allow of solving problems of such extensions, since the memory is getting insufficient, Moreover, a division into small blocks causes the connection problem to grow, after a certain number of iterations, very big. Therefore it has been necessary to replace the "Revised Simplex" method by the "Modified Simplex" method.

Bearing in mind that the duration of the solving of a linear programming problem depends on the square of the matrix dimensions, account should be taken on dividing into blocks of a necessary equilibrium between the number of blocks and the magnitude of the connection problem.

Taking into account these conditions, the mathematical model for the National Power Balance was divided into 8 blocks, while the connection strip comprised 35 restrictions.

As a result of using the "Modified Symplex" method, the price vector of the dual variables π and π_j did no longer appear as a line of the tables of the connection problems, and moreover, a selection of these variables from the line of efficiency function was necessary.

It evidently results from relations (7) and (8) that the connection problem in general would be badly conditioned. Indeed, in the case of National Power Balance relations (8) have all their coefficients and the free term equal with the unit, while relations (7) have the free term of the order 10^7.

It results from definition (3) that components of vector π are the symplex multipliers of the connection problem, which are the coefficients of the efficiency function of the dual variables.

It is well known that in the case of mobile comma operations on an electronic computer, the testing of a zero value is done at a certain precision. This condition is absolutely compulsory since just on reading the number, an arithmetical error depending on the order of magnitude, is being introduced into the computer.

The accumulation of arithmetical errors at a great number of operations makes it necessary to establish the computer zero value which differs from zero. Operations carried out with these values would propagate the error and also influence the final result. In order to reduce to a minimum both arithmetical error and the number of operations, it had been checked — prior to carrying out the operation—whether there was a computer zero, which was replaced by a zero and the operation not carried out.

The pre-established value of the computer zero must be chosen in such a way as to prevent the result of any operation on any term to be of a lower absolute value. If this condition is not fulfilled it may happen in the course of solving that an actually existing number be considered as 0 (zero), or, vice versa, a computer zero be considered as a value whatever.

In the case of the connection problem of the National Power Balance the choosing of a value for the computer zero would have been impossible if it remained bad conditioned. The results of a solving under such conditions would have involved not only errors but could have been completely false. For, without ensuring precision at the connection problem, the conditions

$$\sum_k S_{jk} = 1 \quad \text{(for all } j\text{)}$$

could not be satisfied rigorously. Contrariwise, the convex combination of the solutions obtained from relation (10) failed to be achieved and the solutions were not on the polyhedron of solutions.

In order to achieve these equalities a good conditioning of the connection problem was first of all aimed at. A good conditioning of a system necessarily requires that no differences, exceeding several orders of magnitude, should exist between the problem coefficients. In the case of the National Power Balance the choosing of convenient measure units has made it possible for this condition to be satisfied, as the differences did not exceed 2—3 orders of magnitude.

In the course of solving, after every 20—30 iterations a precision control was made. If errors surpassing 10^{-4} were noted, a calculus of weighted error distribution was applied, so that condition

$$\sum_k S_{jk} = 1 \quad \text{(for all } j\text{)}$$

was satisfied, after which the iterations were continued.

The economic substratum on which the Dantzig-Wolfe decomposition method is actually based is a modification of prices by proceeding to a new iteration contingent upon demand and supply, which is mathematically represented by relation (11).

The National Power Balance covers most of the fuel assortments existent in this country. In this case it is quite obvious that appreciable differences should exist between the prices of various assortments. Relation (11) represents the change of prices in the course of an iteration. In the aforementioned case, this relation may lead to an unessential modification as compared with the great difference between the cost function coefficients; from the view point of advancement to the optimum, this means many and small-step iterations. From the point of view of work on the electronic machine it leads to amplifying time and decreasing precision.

The following 3 ways were studied for accelerating the method and eliminating the lesser iterations:

1. The efficiency function at an iteration for a block becomes

$$C'_j = C_j - \pi B_j$$

Or

$$C_{jk_0} = \underset{k \in I_j}{min.}\, C_{ik},$$

where I_j is the set of the variable indices of block j.

So as to make the changed efficiency function to certainly determine a solution that is different from the previous iteration, it is necessary that

$$C'_{jk_0} > \underset{k \in I_j - k_0}{min.}\, C'_{jk}$$

In order to achieve this it is necessary to diminish the difference

$$\underset{k \in I_j}{max.}\, C_{jk} - \underset{k \in I_j}{min.}\, C_{jk}$$

If X_j is the solution of the block for a certain iteration without diminution of the interval and a projective transformation Γ is being applied, the X_j^* solution is obtained, and

$$X_j \neq X_j^*$$

In order to have the solution established in relation to the transformation we must have

$$\frac{a_{jk}}{C_{jk}} = \frac{a_{jk}}{\Gamma(C_{jk})}$$

but this equality takes only place if transformation Γ is applied also to elements a_{jk}, b_j.

2. Exaggerated demand. The value of the coefficient actually expresses excess of demand over supply. By exaggerating demand, in the case of insufficient sources the modification of prices at a more accelerated rate is required.

3. Anticipation of price rises. Establishing by some iteration the assortment where quantity has become insufficient, the price rise is being anticipated by an amount of value expressed through the price difference between assortments.

The general aspect of these methods of acceleration has not been studied to the full, so that it may be the object of a separate study. In the National Power Balance case the first method has proved to be the most advantageous. The two-phase method, known in the solving of linear programming problems, appears under a generalized form also in the Dantzig-Wolfe method.

After having established by means of the Dantzig-Wolfe decomposition method — under the form published in literature — the methods for eliminating the difficulties which had rendered the National Power Balance problem unsolvable, the working out of the programme for the Elliott 803-B electronic computer was undertaken.

Since the computer's memory does not allow of introducing complete information for the whole problem, five separate programmes have been worked out. These programmes do not work concomitantly, but use the same part of memory as working cells, preparing primary data the ones for the others. The data will be deposited in the computer's memory or recorded on paper tape (paper memory). Each complete iteration requires employment of all the five programmes for a certain number of times.

The programmes — in the sequence of participation in a complete iteration — are the following:

— The programme for computation and generation of new efficiency functions of the subproblems, according to relation (11) (CCA).

— The programme for the solving of blocks, relations (12) (BCS).

— The programme for computing the minimum δ and the vectors (6) for the new connection problem (SACC).

— The programme for building up the new connection problem (7), (8), (9) (IECPL).

— The programme for solving the connection problem with selection of the price vector of the dual variables (PCS).

As the Elliott 803-B computer, employing the AUTOCOD MARK 103 language combined with MACHINE CODE blocks, involves a controlled data reading (control of letter and of number), a check-up was envisaged initially on working out the programme, so that the data tape should be selected in such a way as to enable replacement of one tape by another during the work period. This precaution has proved to be most useful since during a long work period with a very great number of tapes, an erroneous introduction of data may frustrate tens of hours of computation. A complete iteration is carried out after the scheme in figure 3, where the data tapes needed or supplied by each programme are the following:

CI, O	the initial efficiency function corresponding to block *i*
CB, J	cost vector of the dual variables of iteration *j*
AI	common strip attached to block *i*
CI, J	efficiency function at iteration *j* corresponding to block *i*
BI	matrix of block *i*
SI, J	solution to block *i* at iteration *j*
IECI, J	presumptive vector for the new connection problem of block *i* at iteration *j*
PLJ	connection problem at iteration *j*
SPLJ	solution of the connection problem at iteration *j*.

In case of the National Power Balance problem, having 8 independent blocks, the total amount of information required 40 permanent data tapes and 19 current data tapes for each iteration.

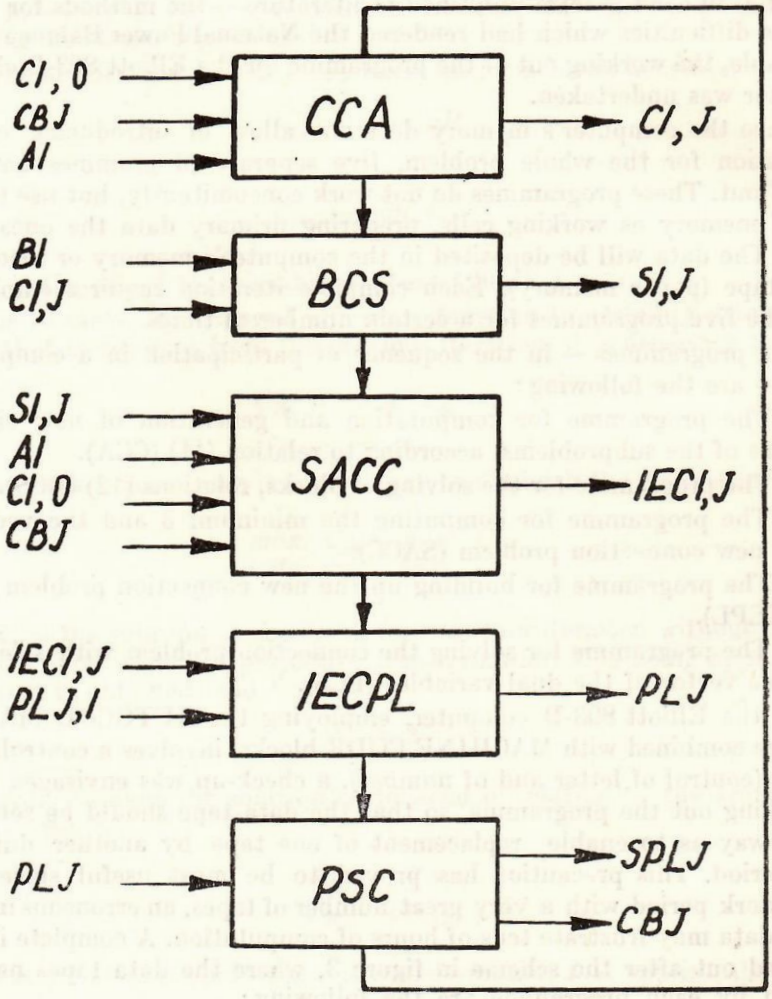

Fig. 3

Obviously, this article cannot cover and elucidate all the problems that have cropped up during the solving work, neither can it enlarge upon all mathematical proofs of the conclusions merely referred to.

However, we feel that stress should be laid on the fact that the solving of a large—extension linear programming problem requiring employment of a decomposition algorithm does not mean a mechanical sectioning of the mathematical model worked out for optimization by linear programming. Before proceeding to the elaboration of the model it is absolutely necessary to know the solving method, choose the sequence of variables, and restrictions, the measure units, as well as the way of expressing a technical and economic condition by one or more restrictions chosen so as to be in keeping with the method. This can be only achieved by close co-operation between the authors of the model and its solvers.

At any rate, the decomposition method should not be considered as a formula applicable to any problem of any type.

The economic consequences which have been conducive to the inception of the decomposition algorithm are specific to each branch of economy or process of production and therefore will bear on the solving of each problem taken separately.

REFERENCES

1. DANTZIG, G.B. and WOLFE, Ph., *The Decomposition Algorithm for Linear Programs*, "Econometrica", vol. 29, No. 4, Oct. 1961
2. BAUMOL, W.I. and FABIAN T., *Decomposition Pricing for Decentralization and External Economics*, "Management Science", vol. 11, No. 1, Sept. 1964
3. DANTZIG, G.B. and WOLFE, Ph., *Decomposition Principle for Linear Programs*, Rand Corporation, Santa Monica, California, 1959
4. SIMONARD, J., *Programation linéaire*, Ed. Dunod, Paris, 1962
5. ГОЛЬДШТЕЙН, Е. Т. and ЮДИН, Д. В., Новые направления в линейном программировании, Издательство Советское Радно, Москва, 1966.
6. DANTZIG, G.B., *Linear Programming Extensions*, Rand Corporation, Santa Monica, California, 1963
7. KREKO, B., *Lineiaris programmozas*, Kozgazdasági Könyv Kiadó, Budapest, 1961.

SOLUTIONNEMENT DES PROBLEMES DE PROGRAMMATION LINEAIRE DE GRANDES DIMENSIONS PAR LA METHODE DANTZIG-WOLFE DE DECOMPOSITION, AU MOYEN DU CALCULATEUR ELECTRONIQUE ELLIOTT 803-B

Dans l'intervalle novembre 1966—janvier 1967 on a achevé, au moyen du calculateur électronique du Combinat Sidérurgique de Hunedoara, le solutionnement d'un problème de programmation linéaire de 313 restrictions avec 1003 variables, selon une méthodologie élaborée par un groupe de mathématiciens et de physiciens faisant partie de ce centre de calcul.

C'est la première fois qu'un problème de telles dimensions est résolu en Roumanie.

La méthode élaborée et programmée sur le calculateur électronique du Combinat Sidérurgique de Hunedoara se base sur l'algorithme «Simplex modifié» et sur la méthode de décomposition Dantzig-Wolfe. On expose dans cet article les phases d'élaboration de la méthode et de solutionnement du problème:

— Examen des difficultés qui déterminent l'impossibilité de résoudre le problème proposé à l'aide des méthodes connues dans la littérature ;

— Analyse et choix des méthodes de base pour la sous-routine ;

— Adaptation de la méthode Dantzig-Wolfe de décomposition, au calculateur du Combinat Sidérurgique de Hunedoara ;

— Méthodes élaborées en vue d'assurer la précision requise par la nature du problème et de réaliser un temps de travail convenable ;

— Division du problème en blocs en vue de réaliser les conditions techniques imposées par la limitation des dimensions du problème de liaison ;

— Problème de l'organisation du travail effectif à l'aide de la machine, tenant compet de la quantité d'informations nécessaires.

РЕШЕНИЕ ЗАДАЧ ЛИНЕЙНОГО КРУПНОГО ПРОГРАММИРОВАНИЯ МЕТОДОМ РАЗЛОЖЕНИЯ ДАНЦИГ-ВОЛЬФЕ НА ЭЛЕКТРОННОЙ СЧЕТНОЙ МАШИНЕ ЭЛЛИОТТ 803-Б

В течение периода с ноября 1966 года по январь 1967 года на электронной счетной машине Металлургического комбината Хунедоры было закончено решение задачи линейного программирования размеров в 313 ограничениях с 1003 переменными по методу, разработанному группой математиков и физиков этого вычислительного центра.

Впервые задача таких размеров разрешена в нашей стране.

Метод, разработанный и программированный на электронной счетной машине Металлургического комбината Хунедоры, основывается на алгоритме «Симплекс измененный» и на методе разложения Данциг-Вольфе.

В работе объясняются этапы разработки метода и решение задачи:

— Исследование затруднений, обусловливающих невозможность решения задачи по методам, известным из литературы.

— Анализ и выбор основных методов для подпрограммы.

— Применение метода разложения Данциг-Вольфе для вычислительной машины Металлургического комбината Хунедоры.

— Методы, разработанные для обеспечения точности, вытекающей из самой природы задачи и достижения приемлемого рабочего времени.

— Разделение задачи по блокам ввиду получения заданных технических условий ограничения размеров задачи связи.

— Задача организации эффективной работы на машине, когда имеется в виду количество необходимой информации.