Professor MANEA MĂNESCU
Member of Romanian Academy

"Nowadays cybernetics has an increasing importance in the management of industrial and economical processes, in reducing the human effort and in increasing the special productivity of man's work, in the overall progress of mankind".

NICOLAE CEAUȘESCU

from the Message addressed by the President of the Socialist Republic of Romania to the Third International Congress of Cybernetics and Systems.

Cybernetic Scenario. Accumulation-Consumption Correlation

Accumulation-consumption correlation represents the fundamental *social command* for the process of economic-social development. National income may be represented as a cybernetic system with two subsystems: accumulation fund and consumption fund. Hence, the cybernetic model shows like in Fig. 1.

As it is seen, the cybernetic model of national income is ruled by two positive-negative independent loops with feedback. The two feedback loops represent the process of distributing the national income in accumulation and consumption funds, thus ensuring the economic development and life quality increase.

Accumulation fund is connected through a positive feedback loop modelling the growth of national income.

Consumption fund is connected through a negative feedback loop modelling the growth of life quality, of national income consumption.

The positive feedback loop of accumulation reflects the growth of national income, as accumulation fund — through investment, technologies — *generates* the increase of production, of national income, respectively.

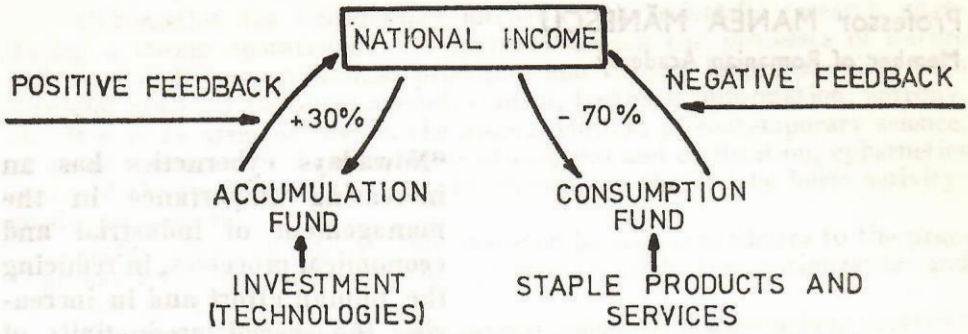

Fig. 1 ACCUMULATION-CONSUMPTION CYBERNETIC CORRELATION FEEDBACK LOOPS

The quote of national income allocated to accumulation can not increase without a limit, because a share of national income must be allocated to consumption fund which ensures the increase of population living standard.

That is why, a negative feedback loop which *controls* the accumulation level intervenes in national income distribution.

The cybernetic model of optimally distributing the national income into accumulation and consumption funds has a great importance for ensuring the economic development, particularly for the developing countries.

Romania's experience proves that the allocation of a share of about 30% from national income for accumulation fund creates the best conditions of general economic development by allocating financial funds for investments materialized in factories and industrial plants having modern technologies of high productivity, for modernizing the agriculture-irrigations, mechanization, chemization — for developing the transports and material foundation of education, culture and health for creating new working places, for a more active and efficient participation in international economic exchanges and ensuring the continuous increase of life quality.

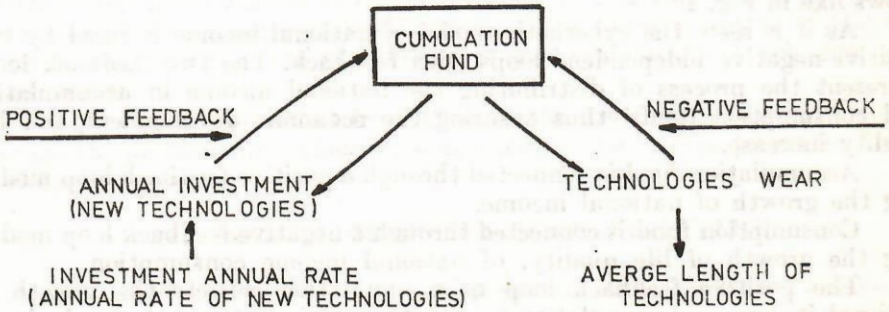

Fig. 2 CYBERNETIC MODEL OF ACCUMULATION FUND FEEDBACK CYBERNETIC LOOPS

THE CYBERNETIC–ECONOMIC MODEL OF OPTIMAL DISTRIBUTING THE NATIONAL INCOME FOR ACCUMULATION AND CONSUMPTION

The cybernetic model of optimal distribution of the national income between accumulation and consumption is placed on a central position among the models of the social product and national income system.

The importance of the cybernetic model of optimal distribution of the national income derives from the fact that the strategy of distributing the national income between consumption and accumulation is the fundamental element in designing the trajectories of economic growth, of amplifying the national wealth and nation's welfare.

In what follows the general cybernetic model of optimal distribution of the national income will be presented, followed by an analysis of one of its variants obtained from specific working hypothesis.

One will use the representation of synthetic indices of the national economy in Figs. 3 and 4.

The volume of social product during year t is:

$$P_t = V_t + \theta_t$$

where:

P_t — volume of social product during year t;
V_t — volume of created national income during year t;
θ_t — volume of material expenses during year t.

If α_t is the weight of material expenses in the total social product:

$$\alpha_t = \frac{\theta_t}{P_t}$$

then

$$V_t = (1 - \alpha_t)P_t;$$

— *the volume of created national income during year t*, is given by the following macroeconomic production function which also reflects the technological progress:

$$h_t: R_+ \times R_+ \to R_+.$$

Thus the volume of created national income during year t is given by

$$V_t = h_t(L_t, K_t)$$

where:

K_t — volume of fixed funds during year t;
L_t — volume of labour forces in branches creating national income during year t;

— *the volume of shareable national income* is obtained by adding the volume of created national income (V_t) to the difference between import (M_t) and export (E_t):

$$V_t^r = V_t + M_t - E_t$$

or

$$V_t^r = h_t(L_t, K_t) + M_t - E_t;$$

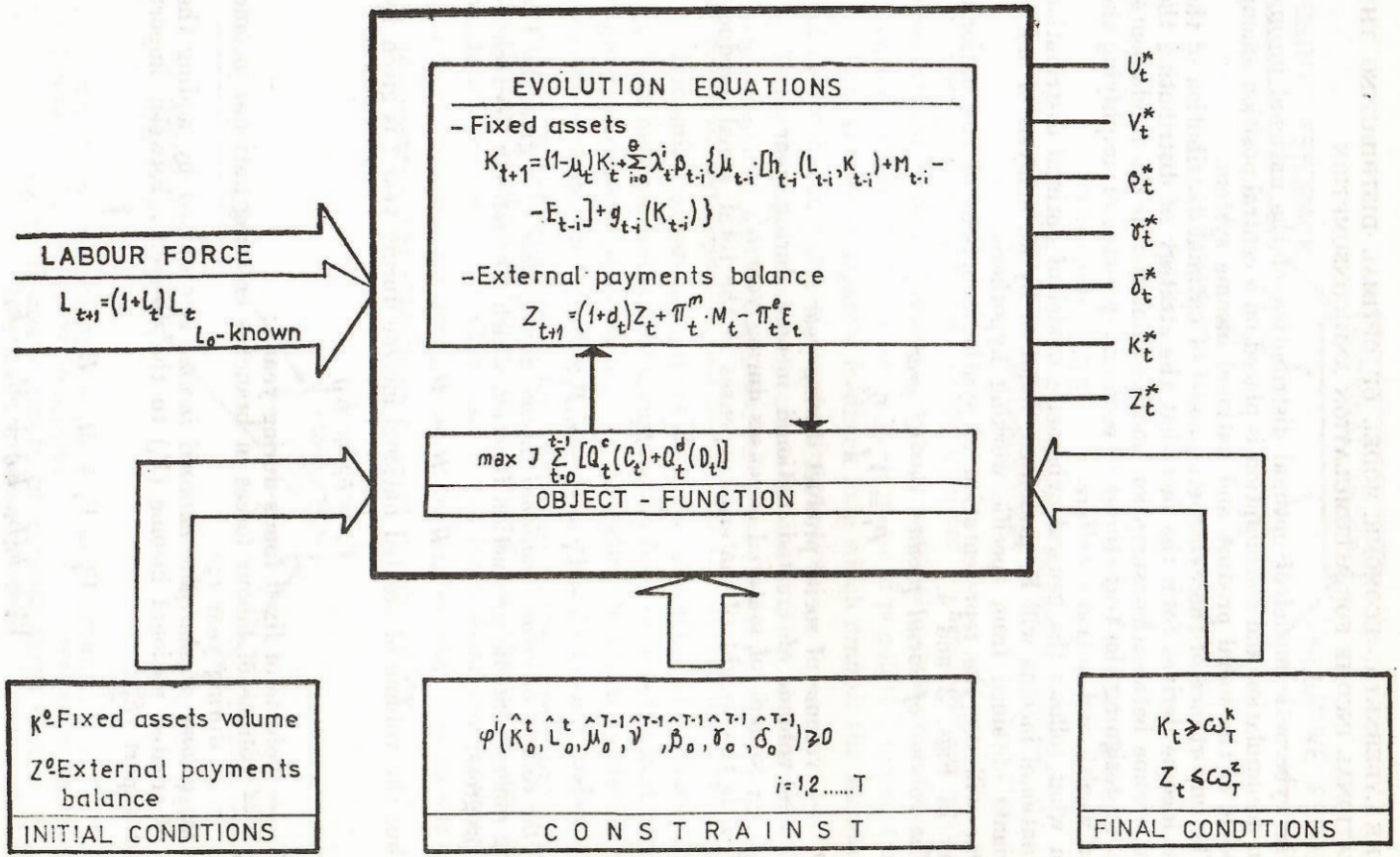
EVOLUTION EQUATIONS
- Fixed assets
$K_{t+1}=(1-\mu_t)K_t+\sum_{i=0}^{\theta}\lambda_t^i\rho_{t-i}\{\mu_{t-i}\cdot[h_{t-i}(L_{t-i},K_{t-i})+M_{t-i}-$
$-E_{t-i}]+g_{t-i}(K_{t-i})\}$
-External payments balance
$Z_{t+1}=(1+d_t)Z_t+\pi_t^m\cdot M_t-\pi_t^e\varepsilon_t$
LABOUR FORCE
$L_{t+1}=(1+l_t)L_t$
L_0-known
$\max J\sum_{t=0}^{t-1}[Q_t^c(C_t)+Q_t^d(D_t)]$
OBJECT - FUNCTION
U_t^*
V_t^*
ρ_t^*
γ_t^*
δ_t^*
K_t^*
Z_t^*
K°Fixed assets volume
Z°External payments balance
INITIAL CONDITIONS
$\varphi^i(\hat{K}_0^t,\hat{L}_0^t,\hat{\mu}_0^{T-1},\hat{\nu}^{T-1},\hat{\rho}_0^{T-1},\hat{\gamma}_0^{T-1},\hat{\delta}_0^{T-1})\geq 0$
$i=1,2.....T$
C O N S T R A I N S T
$K_t\geq\omega_T^K$
$Z_t\leq\omega_T^Z$
FINAL CONDITIONS

Fig. 3

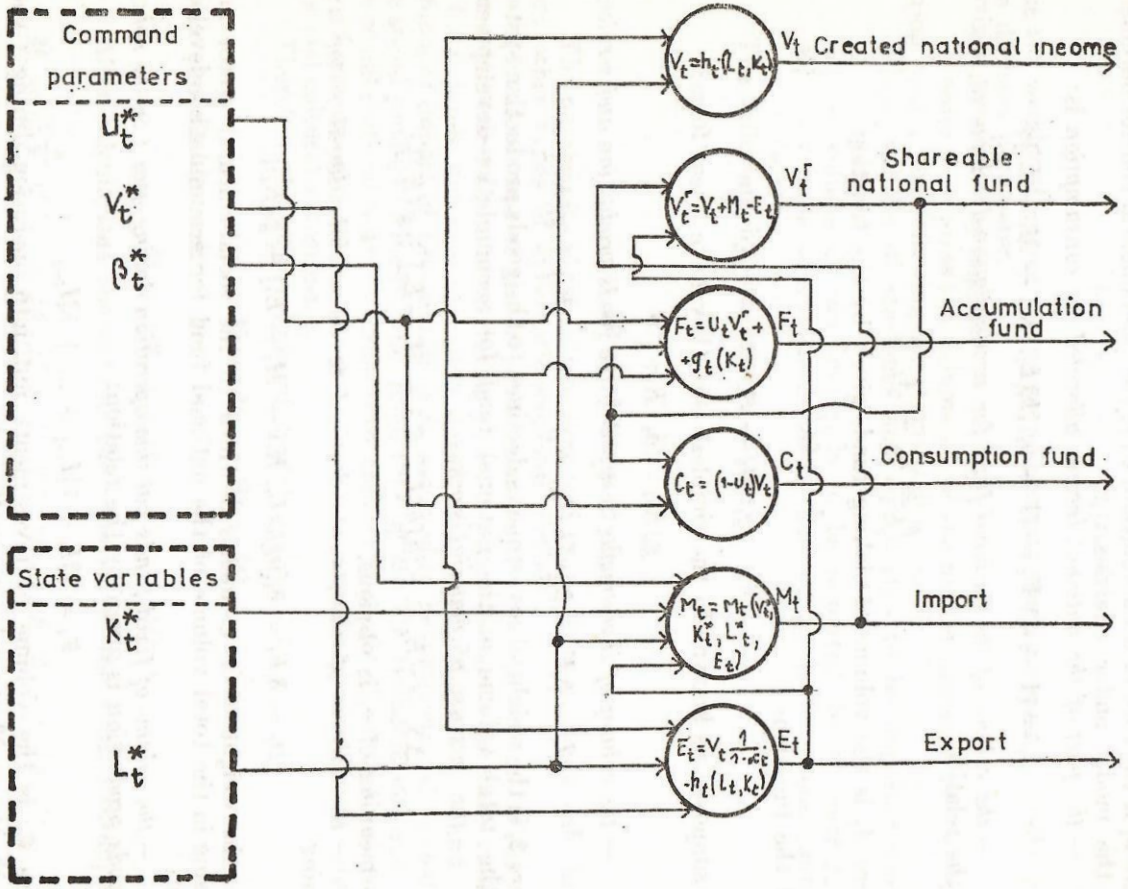
Command parameters
U_t^*
V_t^*
β_t^*
State variables
K_t^*
L_t^*
$V_t = h_t(L_t, K_t)$
V_t Created national income
$V_t^r = V_t + M_t - E_t$
V_t^r
Shareable national fund
$F_t = U_t V_t^r + g_t(K_t)$
F_t
Accumulation fund
$C_t = (1-U_t)V_t$
C_t
Consumption fund
$M_t = M_t(V_t, K_t^*, L_t^*, E_t)$
M_t
Import
$E_t = V_t \frac{1}{1-\alpha_t} - h_t(L_t, K_t)$
E_t
Export

Fig, 4

— *the part of national income allocated for accumulation-development* — has the expression:

$$B_t = u_t \cdot V_t^r = u_t[h_t(L_t,\ K_t) + M_t - E_t]$$

where u_t is the rate of accumulation. U_t is the fundamental control parameter for the model under analysis.

— *the part of the national income allocated for consumption* is:

$$C_t = (1 - u_t)\ V_t^r = (1 - u_t)\,[h_t(L_t,\ K_t) + M_t - E_t];$$

— *the volume of the national fund for accumulation-development* is given by the relation

$$F_t = B_t + A_t$$

where A_t is the volume of sinking fund, given by the function

$$A_t = g_t(K_t)$$

and the functions

$$g_t\colon R_+ \to R_+$$

are supposed as known. In the simplest case they have linear form:

$$g_t(K_t) = a_t \cdot K_t;$$

— *the volume of investments destined to the goods production and services:*

$$I_t = \beta_t F_t = \beta_t\{u_t[h_t(L_t,\ K_t) + M_t - E_t] + g_t(K_t)\}$$

where β_t is the weight of investments destined to the goods production system in the total volume of the national fund for accumulation-development.

— *the increase of material stocks:*

$$\Delta S_t = \gamma_t E_t = \gamma_t\{u_t[h_t(L_t,\ K_t) + M_t - E_t] + g_t(K_t)\}$$

The meaning of γ_t is obvious.

— *the volume of investments destined to the social-cultural sector and housing*

$$D_t = \delta_t F_t = \delta_t\{u_t[h_t(L_t, K_t) + M_t - E_t] + g_t(K_t)\}$$

δ_t is the weight of investments destined to the social-cultural sector and housing in the total volume of the national fund for accumulation-development.

— *the volume of fixed funds put into operation during year t in the sphere of goods production* is given by the relation:

$$\mathcal{F}_t = \lambda_t^0 I_t + \lambda_t^1 I_{t-1} + \ldots + \lambda_t^\theta I_{t-\theta}$$

where $\mathcal{F}_t$ is the volume of investments put into operation during t year and $\lambda_t^0,\ \lambda_t^1,\ \ldots,\ \lambda_t^\theta$ are delaying coefficients.

It results:

$$\mathcal{F}_t = \sum_{i=0}^{\theta} \lambda_t^i \beta_{t-i}\{u_{t-i}[h_{t-i}(L_{t-i},\ K_{t-i}) + M_{t-i} - E_{t-i}] + g_{t-i}(K_{t-i})\};$$

— *the volume of export is*

$$E_t = \nu_t P_t = v_t \frac{1}{1 - \alpha_t} V_t$$

$$E_t = v_t \frac{1}{1 - \alpha_t} h_t(L_t,\ K_t)$$

v_t is the weight of export in the social product during year t. Usually v_t is the decision parameter.

— *the volume of import:*

In order to express the volume M_t of the import necesary to be made during year t the following notations will be used:

M_t^1 — volume of machines and equipments to be imported during year t;

M_t^2 — volume of raw materials to be imported during year t;

M_t^3 — volume of consumer goods and of goods for social-cultural sector.

The following hypotheses are made:

$$M_t^1 = \eta_t^1 \cdot \mathcal{F}_t$$

$$M_t^2 = \eta_t^2 \cdot P_t$$

$$M_t^3 = \eta_t^3 \cdot C_t + \eta_t^4 \cdot D_t$$

The parameters η_t^1, η_t^2, η_t^3 are supposed to be known, being calculated from other types of cybernetic-economic models.

Therefore, one of the hypotheses made is that the volume of import of machines and equipments during year t is proportional to the total volume of fixed funds put into operation during the year under analysis and the volume of import of raw materials is assumed to be proportional to that of the social product. Finally, the import of goods for consumption and for the social-cultural sector is assumed to amount to a part η_t^3 of the total volume of consumption during the year t added to a quota η_t^4 of the total volume of social-cultural investments.

Therefore the total volume of import is given by

$$M_t = M_t^1 + M_t^2 + M_t^3$$

which can also be written as:

$$M_t = \eta_t^1 \mathcal{F}_t + \eta_t^2 P_t + \eta_t^3 C_t + \eta_t^4 D_t$$

After calculations one obtains the equation of the volume of import:

$$M_t = \eta_t^1 \sum_{i=0}^{\theta} \lambda_t^i \beta_{t-i}\{u_{t-i}[h_{t-i}(L_{t-i}, K_{t-i}) + M_{t-i} - E_{t-i}] + g_{t-i}(K_{t-i})\} +$$

$$+ \eta_t^2 \frac{1}{1 - \alpha_t} h_t(L_t,\ K_t) + \eta_t^3 (1 - u_t)[h_t(L_t,\ K_t) + M_t - E_t] +$$

$$+ \eta_t^4 \delta_t \{u_t[h_t(L_t,\ K_t) + M_t - E_t] + g_t(K_t)\}.$$

The economic-mathematic model developed here has three *state variables* (the volume of fixed funds K_t, the volume of labour force L_t, the external payments balance Z_t).

— *the model evolution equations* are:

— *for labour force:*

$$L_{t+1} = (1 - l_t)\, L_t;$$

— *for fixed funds:*

$$K_{t+1} = (1 - \mu_t)\, K_t + \sum_{i=0}^{\theta} \lambda_t^i \beta_{t-i} \{u_{t-i}[h_{t-i}(L_{t-i}, K_{t-i}) + M_{t-i} - E_{t-i}] + g_{t-i}(K_{t-i})\};$$

— *for external payments balance:*

$$Z_{t+1} = (1 + d_i)\, Z_t + \pi_t^m \cdot M_t - \pi_t^e E_t.$$

The notations are as follows:

l_t — the rate of labour force increase in the sphere of material production;

μ_t — the amount of discused equipment of fixed funds during year t as result of the wear;

d_t — average interest for granted and received credits;

π_t^m — currency exchange rate for imports during year t;

π_t^e — currency exchange rate for exports during year t.

The *model constraints* represent compulsing requirements to be satisfied by the system during its evolution. Their general form is:

$$\varphi^i(\hat{K}_0^T, \hat{L}_0^T, \hat{u}_0^{T-1}, \check{v}_0^{T-1}, \hat{\beta}_0^{T-1}, \hat{\gamma}_0^{T-1}, \hat{\delta}_0^{T-1}) \geqslant 0 \qquad (i = 1, 2, ..., r)$$

where T is the time horison for which the model operates. The following vectorial notations have been used:

$$\hat{K}_0^T = (K_0, K_1, ..., K_T)$$

$$\hat{L}_0^T = (L_0, L_1, ..., L_T)$$

$$\hat{u}_0^{T-1} = (u_0, u_1, ..., u_{T-1}).$$

The *model performance* (the objective function) reflects the fundamental purpose of the process of economic growth, i.e. the maximisation of the nation's welfare. It is expressed by the *expanded consumption fund*, representing all resources from the national income destined to the increase of the living standard, determined by adding to the consumption fund of the investments for housing and for extending the material basis of social-cultural institutions (education, culture, national health etc.). The objective function has the form

$$J = \sum_{t=0}^{T-1} Q_t (C_t, D_t)$$

$Q(\ldots)$ being functions quantifying the effect of the consumption volume and social-cultural and housing investments respectively on the increase of the general welfare. In general they are increasing concave functions.

The optimal solutions must indicate the evolution trajectories ensuring the maximisation of the *expanded consumption fund.*

At the same time, the trajectories obtained by solving the model must satisfy the *final conditions*

$$K_T \geqslant \omega_T^K$$

$$Z_T \leqslant \omega_T^Z.$$

By putting together the equations one obtains the following *general cybernetic model of optimal distribution of the national income between accumulation and consumption*:

— *evolution equations:*

$$L_{t+1} = (1 + l_t)L_t$$

$$K_{t+1} = (1 - \mu_t)K_t + \sum_{i=0}^{\theta} \lambda_t^i \beta_{t-i}\{u_{t-i}[h_{t-i}(L_{t-i},\ K_{t-i}) + M_{t-i} -$$

$$- E_{t-i}] + g_{t-i}(K_{t-i})\}.$$

$$Z_{t+1} = (1 + d_t)\, Z_t + \pi_t^m M_t - \pi_t^e E_t$$

$$L_0 - \text{given}$$

$$K_0 - \text{given}$$

$$Z_0 - \text{given};$$

— *the final state:*

$$K_T \geqslant \omega_T^K$$

$$Z_T \leqslant \omega_T^Z;$$

— *the model constraints:*

$$\varphi^i(\hat{K}_0^T,\ \hat{L}_0^T,\ \hat{u}_0^{T-1},\ \hat{v}_0^{T-1},\ \hat{\beta}_0^{T-1},\ \hat{\gamma}_0^{T-1},\ \hat{\delta}_0^{T-1}) \geqslant 0 \qquad (i = 1, 2, \ldots, r);$$

— *permitted controls range:*

$$u_t \in [\xi_u^1,\ \xi_u^2];$$

$$v_t \in [\xi_v^1,\ \xi_v^2];$$

$$\beta_t \in [\xi_\beta^1,\ \xi_\beta^2];$$

$$\gamma_t \in [\xi_\gamma^1,\ \xi_\gamma^2];$$

$$\delta_t \in [\xi_\delta^1,\ \xi_\delta^2];$$

$$\beta_t + \gamma_t + \delta_t \leqslant \bar{\xi}_t;$$

— *model performance:*

$$max\ J = max \sum_{t=0}^{T-1} Q_t \{(1 - u_t)[h_t(L_t, K_t) + M_t - E_t].$$

$$\delta_t \{ u_t [h_t (L_t\ K_t) + M_t - E_t] + g_t (K_t) \}\}.$$

The volume of export E_t and the volume of import M_t are given by the following mathematical expressions:

$$E_t = v_t \frac{1}{1 - \alpha_t} h_t (L_t,\ K_t)$$

$$M = \eta_t^1 \sum_{t=0}^{T-1} \lambda_t^i \beta_{t-i} \{u_{t-i}[h_{t-i}(L_{t-i},\ K_{t-i}) + M_{t-i} - E_{t-i}] + g_{t-i}(K_{t-i})\} +$$

$$+ \eta_t^2 \frac{1}{1 - \alpha_t} h_t(L_t,\ K_t) + \eta_t^3 (1 - u_t)[h_t(L_t,\ K_t) + M_t - E_t] +$$

$$+ \eta_t^4 \delta_t \{u_t[h_t(L_t,\ K_t) + M_t - E_t] + g_t(K_t)\}.$$

The elements of the model developed here can be grouped as follows:

a) *model state variables:*

L_t — volume of labour force in the sphere of material production during year t. It has an evolution exogeneous to the model;

K_t — volume of fixed funds in the sphere of material production;

Z_t — external payments balance during year t.

b) *model decision parameters:*

u_t — accumulation rate;

v_t — weight of export in the social product;

β_t — weight of productive investments in the volume of the fund for development;

γ_t — weight of investments for increasing the material stocks in the national fund for accumulation-development;

δ_t — weight of social-cultural and housing investments in the volume of the fund for accumulation-development.

c) *model output variables*

— social product;
— created national income;
— shareable national income;
— fund for accumulation-development, on components;
— consumption fund;
— export volume;
— import volume on elements, a.o.

By applying the maximum principle for discrete dynamic systems, one can develop the algorithm which produces the trajectories of optimal growth.

One must point out that the general model of optimal distribution of the national income has the role of emphasising some mechanisms specific to the system under analysis. The obtained results can be used in designing the trajectories of optimal growth.

The qualitative study of optimal trajectories is of particular interest for the economic analysis, and also the emphasis of their sensitivity with respect to changes in some of the model parameters such as the cost effectiveness coefficient of fixed funds, the level of currency exchange rate for exports and imports a.o. This allows to quantify the influence of changes in some of the model parameters upon the overall economic growth.

A variant of the general cybernetic model of the social product and national income system will be analysed. One will assume that the macroeconomic production function is linear and depends on a single variable:

$$V_t = (1 - \alpha_t)\, e_t K_t$$

e_t being the cost-effectiveness coefficient of fixed funds:

$$e_t = \frac{P_t}{K_t}.$$

One will assume that there are no delayed variables in the model and also no variables concerning the foreign trade.

Under these circumstances the *equation of the fund for accumulation-development*, expressed a function of the accumulation rate, cost-effectiveness of fixed funds, their volume, the weight of material expenses in the social product and the sinking quota is

$$F_t = u_t(1 - \alpha_t)\, e_t K_t + a_t K_t = [(1 - \alpha_t)\, u_t e_t + a_t] \cdot K_t.$$

α_t being the sinking coefficent for fixed funds.

The volume of investments into the goods production system is given by the expression:

$$I_t = \beta_t F_t = \beta_t[(1 - \alpha_t)\, u_t e_t + a_t] K_t$$

The evolution equation of fixed funds is

$$K_{t+1} = K_t - \mu_t K_t + I_t$$

By replacing I_t with the expression obtained above one gets:

$$K_{t+1} = (1 - \mu_t)\, K_t + \beta_t[1 - \alpha_t)\, u_t e_t + a_t]\, K_t$$

or:

$$K_{t+1} = \{(1 - \mu_t) + \beta_t[(1 - \alpha_t)\, u_t e_t + a_t]\}\, K_t.$$

The above equation shows the evolution of productive fixed funds as function of:

u_t — accumulation rate;
e_t — cost-effective of fixed funds;
β_t — the weight of investments into the sphere of goods production in the fund for accumulation-developement;

a_t — the weight of material costs in the social product;
α_t — sinking rate;
μ_t — the fixed fund deterioration coefficient.

When, for the model analysis, one considers as working hypothesis the fact that the elements of the above equation are time invariant, the fixed funds evolution is given by the equation:

$$K_t = \{(1 - \mu) + \beta[(1 - \alpha)\, u\, e + a]\}^t \cdot K_0$$

K_0 — being their initial value.

The formulae which follow show the evolution of the synthetic indices of the national economy (output variables):

The equation of social product increase:

$$P_t = e\{(1 - \mu) + \beta[(1 - \alpha)\, ue + a]\}^t \cdot K_0.$$

The equation of the national income increase:

$$V_t = (1 - \alpha)\, e\, \{(1 - \mu) + \beta[(1 - \alpha)ue + a]\}^t \cdot K_0.$$

The equation of the increase of the fund for accumulation-development:

$$F_t = [(1 - \alpha)\, ue + a]\, \{(1 - \mu) + \beta\, [(1 - \alpha)\, u\, e + a]\}^t \cdot K_0.$$

The equation of consumption fund increase:

$$C_t = (1 - \mu)\, (1 - \alpha)\, e\, \{(1 - \mu) + \beta\, (1 - \alpha)\, ue + a]\}^t K_0$$

C_t is the volume of consumption fund during year t.

An index reflecting more completely the increase of the life quality is the expanded consumption fund which, as it has been shown, is obtained by adding the consumption fund with the volume of social-cultural and housing investment.

Noting by G_t this index one can write:

$$G_t = C_t + \delta_t F_t$$

δ_t being the weight of social-cultural and housing investments in the national fund for development. Based on the model produced here one can obtain:

— the *increase of the expanded consumption fund:*

$$G_t = \{(1 - u)(1 - \alpha)\, e + \delta_t [(1 - \alpha)\, ue + a]\} \cdot \{(1 - \mu) + \\ + \beta[(1 - \alpha)\, ue + a]\}^t \cdot K_0.$$

Since decisions of economic policy concerning the national income distribution are taken also according to the level of consumption fund or of the extended consumption fund over the whole period of planning or forecast and not only according to that refering to a single year, the model which quantifies, for the model in hand, the two cumulated magnitudes will be given.

The two indices mentioned above are given by the following mathematical relations:

— *the consumption fund cumulated over the time interval* [0, T]

$$\sum_{t=0}^{T} C_t = (1-u)(1-\alpha)\, e\, K_0 \frac{\{(1-\mu)+\beta(1-\alpha)\, ue + a]\}^{T+1} - 1}{\beta[(1-\alpha)\, ue + a] - \mu}$$

— *the expanded consumption fund* cumulated over the time interval [0, T]

$$\sum_{t=0}^{T} G_t = \{(1-u)(1-\alpha)e + \delta[(1-\alpha)\, ue + \\ + a]\} K_0 \frac{\{(1-\mu)+\beta[(1-\alpha)\, ue + a]\}^{T+1} - 1}{\beta[(1-\alpha)ue + a] - \mu}.$$

The indices written above reflect the influence of the adopted policy in the field of distributing the national income and the fund for development upon the increase of the life quality.

By adding to the evolution equation of fixed funds obtained above an objective function (the model performance) one can obtain a dynamic model based on which one can analyse the optimal evolution of some synthetic indices of the national economy when the model elements are time variant.

The analysis of this variant of the general model can produce preliminary information concerning the general model.

Other models of the social product and national income system show in an analytical form the national income distribution and redistribution processes, their correlation with the phenomena taking place in other systems and especially in that of the nation's welfare.